CITY OF EUREKA

NON-MOTORIZED FLOATING DOCK, PUBLIC RESTROOMS & AQUATIC RESPONSE CENTER

PROJECT INFORMATION

OWNER:	CITY OF EUREKA
OWNER ADDRESS:	531 K STREET EUREKA, CA 95501
DRAFTSPERSON:	NATHAN MEYERS
ENGINEER:	PACIFIC AFFILIATES, TRAVIS SCHNEIDER
PROJECT ADDRESS:	1535 WATERFRONT DRIVE EUREKA, CA 95501
APN #:	002-241-013, 002-241-006

PROJECT DESCRIPTION

PROJECT INCLUDES THE CONSTRUCTION OF A NEW PUBLIC RESTROOM AND AQUATIC RESPONSE CENTER BUILDING. A NEW GANGWAY RAMP AND FLOATING DOCK FOR THE EXISTING PUBLIC BOAT RAMP. EXISTING PARKING LOT IS TO BE RESURFACED AND A NEW SIDEWALK TO PROVIDE ACCESS FROM WATERFRONT DRIVE TO WATERFRONT TRAIL.

SHEET INDEX

SHEET #	DESCRIPTION
G-1	TITLE SHEET
G-1.1	NOTES
C-1	EXISTING SITE & DEMOLITION PLAN
C-2	SITE PLAN
C-3	GRADING, DRAINAGE & EROSION CONTROL PLAN
C-3.1	RESTROOM & ARC GRADING PLAN
C-3.2	RAMP SITE & GRADING PLAN
C-4	SECTIONS
C-5	UTILITY PLAN
C-6.1	GANGWAY RAMP & DOCK DETAILS
C-6.2	GANGWAY RAMP & DOCK DETAILS
C-6.3	GANGWAY RAMP & DOCK DETAILS
C-6.4	GANGWAY RAMP & DOCK DETAILS
C-7.1	DETAILS
C-7.2	DETAILS
C-7.3	DETAILS
C-7.4	DETAILS
T-1	ARC TITLE SHEET & NOTES
A-1	ARC FLOOR & ELECTRICAL PLAN
A-2	ARC ELEVATIONS
ADA-1	ARC ACCESSIBILITY NOTES & DETAILS
S-1	ARC FOUNDATION PLAN
S-2	ARC ROOF PLAN
GBC-1	GREEN BUILDING CODE
GBC-2	GREEN BUILDING CODE
T-24.1	TITLE 24
T-24.2	TITLE 24
T-24.3	TITLE 24
T-24.4	TITLE 24

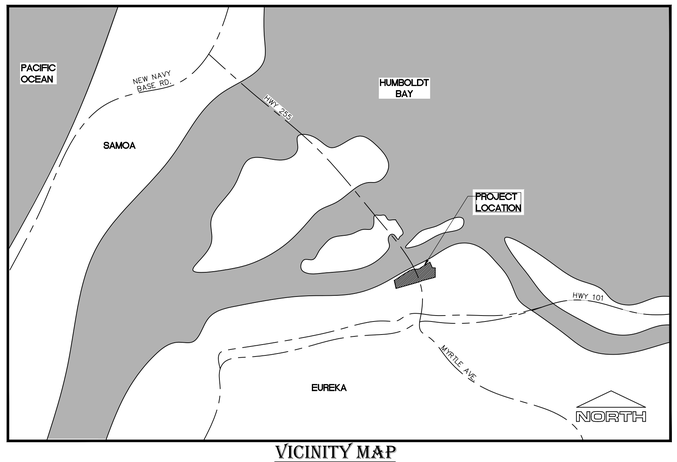

VICINITY MAP
N.T.S.

LEGEND

- SUBJECT PROPERTY LINES
- PROPERTY LINES
- EASEMENT LINE
- ROAD CENTER LINE
- GRADING LIMITS
- SAWCUT LINE
- MAPPED EELGRASS HABITAT
- POTENTIAL EELGRASS HABITAT
- EXISTING STRUCTURE
- NEW STRUCTURE
- EXISTING FENCE
- NEW FENCE
- FIBER ROLL
- EXISTING OVERHEAD ELECTRIC
- NEW OVERHEAD ELECTRIC
- EXISTING SANITARY SEWER
- NEW SANITARY SEWER
- EXISTING WATER
- NEW WATER
- EXISTING JOINT UTILITIES TRENCH
- NEW JOINT UTILITIES TRENCH
- EXISTING STORM DRAIN
- NEW STORM DRAIN
- EXISTING GAS LINE
- NEW GAS LINE
- EXISTING CONCRETE
- NEW CONCRETE
- EXISTING AC PAVING
- NEW AC PAVING
- EXISTING LANDSCAPING
- NEW LANDSCAPING
- ESTUARINE AND MARINE WETLAND
- ACCESSIBLE PATH OF TRAVEL
- WATER VALVE
- WATER METER
- DRAINAGE INLET
- FIRE HYDRANT
- UTILITY POLE
- SANITARY SEWER MAHNOLE
- SEWER CLEANOUT
- STORM DRAIN MANHOLE
- ×10.00 EXISTING ELEVATION
- PROPOSED GRADE
- EXISTING CONTOURS (INTERVAL = 1')
- EXISTING DRAINAGE DIRECTION
- NEW DRAINAGE DIRECTION
- STREET SIGN
- TRAFFIC DIRECTION

ABBREVIATIONS

<E>	EXISTING
<N>	NEW
ARC	AQUATIC RESPONSE CENTER
BOW	BACK OF WALK
CC	CONCRETE
DI	DRAINAGE INLET
DWY	DRIVEWAY
EG	EXISTING GRADE
LF	LINEAR FOOT
EL	ELEVATION
EP	EDGE OF PAVING
ESMT	EASEMENT
FL	FLOWLINE
FF	FINISHED FLOOR
FG	FINISHED GRADE
PC	PROPERTY CORNER
SRA	SELF RETAINING AREA
STD.	STANDARD
SS	SANITARY SEWER
SD	STORM DRAIN
SWK	SIDEWALK
SF	SQUARE FOOT
TC	TOP OF CURB
TG	TOP OF GRATE
TS	TOP OF SLAB
R/W	RIGHT OF WAY
W	WATER
WM	WATER METER

LOCATIONS AND ELEVATIONS SHOWN ARE PROVIDED FOR INFORMATION ONLY. SUCH INFORMATION MAY NOT BE COMPLETE OR ACCURATE. CONTRACTOR IS RESPONSIBLE FOR CONTACTING ALL AGENCIES INVOLVED AND VERIFYING LOCATIONS OF ALL UTILITIES THAT MAY BE IMPACTED BY HIS/HER WORK.

UNAUTHORIZED CHANGES & USES: THE ENGINEER PREPARING THESE PLANS WILL NOT BE RESPONSIBLE FOR, OR LIABLE FOR, UNAUTHORIZED CHANGES TO OR USES OF THESE PLANS. ALL CHANGES TO THE PLANS MUST BE IN WRITING AND MUST BE APPROVED BY THE PREPARER OF THESE PLANS.

FOR PLAN REVIEW ONLY - NOT FOR CONSTRUCTION

PLANS CERTIFIED FOR CONSTRUCTION BY ENGINEER OF RECORD ON _____ SIGNATURE

REVISIONS	BY

PACIFIC AFFILIATES
CONSULTING ENGINEERS
900 W. WATERFRONT DRIVE · EUREKA, CA 95501
TEL (707) 445-3001 · FAX (707) 445-3003

REGISTERED PROFESSIONAL ENGINEER T. L. SCHNEIDER EXP. 12-31-2020 STATE OF CALIFORNIA CIVIL

PRELIMINARY

TITLE SHEET

PACIFIC AFFILIATES, INC. HEREBY EXPRESSLY RESERVES ITS COMMON LAW COPYRIGHT AND OTHER PROPERTY RIGHTS IN THESE PLANS. THESE PLANS AND DRAWINGS ARE NOT TO BE REPRODUCED, CHANGED OR COPIED IN ANY FORM OR MANNER WHATSOEVER, NOR ARE THEY TO BE ASSIGNED TO ANY THIRD PARTY, WITHOUT FIRST OBTAINING THE EXPRESS WRITTEN PERMISSION OF PACIFIC AFFILIATES, INC. IN THE EVENT OF UNAUTHORIZED REUSE OF THESE PLANS BY ANY THIRD PARTY, THE UNDERSIGNED HEREBY AGREES TO INDEMNIFY AND HOLD HARMLESS PACIFIC AFFILIATES, INC. FROM ANY AND ALL LIABILITY, REAL OR ALLEGED, IN CONNECTION WITH SUCH UNAUTHORIZED REUSE. ANY PARTY REUSING THESE PLANS WITHOUT OBTAINING WRITTEN PERMISSION AND CONSENT SHALL BE DEEMED TO HAVE AGREED TO DEFEND, INDEMNIFY AND HOLD HARMLESS PACIFIC AFFILIATES, INC. AGAINST ANY AND ALL CLAIMS, DAMAGES, LOSSES AND EXPENSES ARISING OUT OF OR RESULTING THEREFROM.

CITY OF EUREKA
WATERFRONT DRIVE
EUREKA, CA 95501
APN 002-241-013

Date: DECEMBER 4, 2020
Scale: AS NOTED
Drawn by: NM

SHEET NUMBER
G-1

JOB NUMBER
20-2334

GENERAL NOTES

1. ALL WORK SHALL BE DONE IN ACCORDANCE WITH 2019 CBC, ACI 318-14, AISC, AWS, OSHA AND OTHER APPLICABLE LOCAL BUILDING CODES, STANDARDS AND ORDINANCES.
2. CONTRACTOR SHALL PERFORM ALL SITE WORK IN COMPLIANCE WITH STATE OF CALIFORNIA STANDARDS AND SPECIFICATIONS (2015 OR LATEST EDITION), STANDARD PLANS, AND DIVISION OF INDUSTRIAL SAFETY REQUIREMENTS. SAID WORK SHALL CONFORM TO ALL APPLICABLE OCCUPATIONAL SAFETY AND HEALTH STANDARDS, RULES, REGULATIONS, AND ORDERS ESTABLISHED BY THE STATE OF CALIFORNIA AND OTHER APPLICABLE AGENCIES.
3. THE DRAWINGS SHALL NOT BE SCALED. ALL WORK SHALL BE GOVERNED BY THE DIMENSIONS SHOWN ON THE DRAWINGS. DISCREPANCIES SHALL BE BROUGHT TO THE ATTENTION OF THE ENGINEER PRIOR TO PROCEEDING WITH THE WORK.
4. UNAUTHORIZED CHANGES AND USES: THE ENGINEER PREPARING THESE PLANS WILL NOT BE RESPONSIBLE FOR, OR LIABLE FOR, UNAUTHORIZED CHANGES TO OR USES OF THESE PLANS. ALL CHANGES TO THE PLANS MUST BE IN WRITING AND MUST BE APPROVED BY THE PREPARER OF THESE PLANS.
5. THE CONTRACTOR IS RESPONSIBLE FOR CONTACTING UNDERGROUND SERVICE ALERT, IN ADVANCE, OF ALL APPLICABLE EXCAVATIONS IN ACCORDANCE WITH THE LAW. TOLL FREE NUMBER IS 1-800-642-2444.
6. NO CONSTRUCTION SHALL OCCUR BETWEEN OCTOBER 15TH AND APRIL 15TH WITHOUT PRIOR APPROVAL FROM THE CITY OF EUREKA.
7. HOURS OF OPERATION SHALL BE LIMITED TO MONDAY THROUGH FRIDAY FROM 8:00 AM TO 7:00 PM, SATURDAY FROM 9:00 AM TO 7:00 PM WITH NO CONSTRUCTION ACTIVITY ON SUNDAYS AND HOLIDAYS.
8. TOPOGRAPHIC DATA BASED ON SURVEY CONDUCTED BY PACIFIC AFFILIATES. DATE OF SURVEY: AUGUST 15, 2020.
9. NO KNOWN HAZARDOUS WASTE OR SUBSTANCE SITES ARE LOCATED WITHIN 400 FEET OF SUBJECT SITE.
10. ANY TRAFFIC CONTROL SHAL ADHERE TO THE CURRENT VERSION OF THE MUTCD.
11. THE PROJECT SITE IS NOT LOCATED WITHIN AN AREA WHERE KNOWN CULTURAL RESOURCES HAVE BEEN LOCATED. HOWEVER, AS THERE EXISTS THE POSSIBILITY THAT UNDISCOVERED CULTURAL RESOURCES MAY BE ENCOUNTERED DURING CONSTRUCTION ACTIVITIES, THE FOLLOWINGS MITIGATION MEASURES ARE REQUIRED UNDER STATE AND FEDERAL LAW:

    IF CULTURAL OR HISTORIC RESOURCES ARE ENCOUNTERED DURING CONSTRUCTION ACTIVITIES, THE CONTRACTOR ON SITE SHALL CEASE ALL WORK IN THE IMMEDIATE AREA AND WITHIN A 50-FOOT BUFFER OF THE DISCOVERY LOCATION. A QUALIFIED ARCHAEOLOGIST, AS WELL AS THE TRIBAL HISTORIC PRESERVATION OFFICERS FOR THE BEAR RIVER BAND ROHNERVILLE RANCHERIA, BLUE LAKE RANCHERIA, AND WIYOT TRIBE SHALL BE CONTACTED TO EVALUATE THE DISCOVERY AND, IN CONSULTATION WITH THE APPLICANT AND LEAD AGENCY, DEVELOP A TREATMENT PLAN IN ANY INSTANCE WHERE SIGNIFICANT IMPACTS CANNOT BE AVOIDED. PREHISTORIC MATERIALS MAY INCLUDE OBSIDIAN OR CHERT FLAKES, TOOLS, LOCALLY DARKENED MIDDEN SOILS, GROUNDSTONE ARTIFACTS, SHELLFISH OR FAUNAL REMAINS, AND HUMAN BURIALS.

    IF HUMAN REMAINS ARE FOUND, CA HEALTH AND SAFETY CODE 7050.5 REQUIRES THAT THE COUNTY CORONER BE CONTACTED IMMEDIATELY AT 707-445-7242. IF THE CORONER DETERMINES THE REMAINS TO BE NATIVE AMERICAN, THE NATIVE AMERICAN HERITAGE COMMISSION WILL THEN BE CONTACTED BY THE CORONER TO DETERMINE APPROPRIATE TREATMENT OF THE REMAINS PURSUANT TO CA PUBLIC RESOURCE CODE (PRC) 5097.98. VIOLATORS SHALL BE PROSECUTED IN ACCORDANCE WITH PRC SECTION 5097.99.

    DISCOVERY OF HISTORIC RESOURCES ASSOCIATED WITH THE EARLY RAILROAD INDUSTRY AS IDENTIFIED IN THE CONFIDENTIAL CULTURAL RESOURCE REPORT ON FILE IN THE COMMUNITY DEVELOPMENT DEPARTMENT SHALL BE PROTECTED UNTIL ADEQUATELY ANALYZED BY QUALIFIED HISTORIC RESOURCE CONSULTANTS.

    THE CITY OF EUREKA SHALL BE NOTIFIED AS WELL.

    THE APPLICANT AND SUCCESSORS IN INTEREST ARE ULTIMATELY RESPONSIBLE FOR ENSURING COMPLIANCE WITH THIS CONDITION.

DEMOLITION NOTES

1. ALL EXCAVATIONS AND PLACEMENT OF ENGINEERED FILL SHALL BE IN ACCORDANCE WITH THE APPROVED SOILS REPORT FOR THE SITE. CONTRACTOR IS RESPONSIBLE FOR COMPLYING WITH ALL RECOMMENDATIONS IN SAID REPORT AND OBTAINING GEOTECHNICAL ENGINEERS APPROVAL OF FOUNDATION EXCAVATIONS PRIOR TO CONSTRUCTION OF FOUNDATION SUBGRADE.
2. SITE AND SUBGRADE PREPARATION TO INCLUDE REMOVAL OF EXISTING STRUCTURES, BUILDING FOUNDATIONS, CONCRETE SLABS, ASPHALT PAVING AND ALL RUBBISH AND DEBRIS WITHIN THE LIMITS OF GRADING.
3. ALL ACTIVE OR INACTIVE UTILITY LINES WITHIN THE CONSTRUCTION AREAS SHOULD BE RELOCATED, ABANDONED, OR FULLY PROTECTED DURING CONSTRUCTION.
4. LOOSE SOILS CAUSED BY DEMOLITION OR STRIPPING SHALL BE EXCAVATED AND THE RESULTING DEPRESSION BACKFILLED WITH ENGINEERED FILL COMPACTED TO A MINIMUM OF 90% RELATIVE COMPACTION BASED ON ASTM TEST METHOD D1557.
5. THE GEOTECHNICAL ENGINEER OR AUTHORIZED REPRESENTATIVE SHOULD CHECK SUBGRADE SURFACES EXPOSED BY OVER-EXCAVATION TO DETERMINE IF ADDITIONAL OVEREXCAVATION IS NECESSARY.
6. SPOILS GENERATED DURING THE SITE PREPARATION SHOULD BE STORED AND/OR DISPOSED OF ACCORDING TO AVAILABLE ENVIRONMENTAL DOCUMENTS FOR THE PROJECT.

INSPECTIONS AND TESTING NOTES

1. THE CONTRACTOR SHALL MAKE ALL NECESSARY EXCAVATIONS FOR COMPACTION TESTS. COSTS OF EXCAVATION, BACKFILLING, AND COMPACTING IN CONNECTION WITH COMPACTION TESTING SHALL BE BORNE BY THE CONTRACTOR.
2. A FAILING COMPACTION TEST INDICATES THAT THE REQUIRED COMPACTION STANDARDS HAVE NOT BEEN ACHIEVED. ANY FILL MATERIAL OR PORTION OF FILL MATERIAL THAT DOES NOT MEET THE SPECIFICATION REQUIREMENTS SHALL BE REMOVED AND RECOMPACTED UNTIL THE REQUIREMENTS ARE SATISFIED.
3. EXCAVATIONS FOR COMPACTION TESTS SHALL BE BACKFILLED WITH MATERIAL SIMILAR TO THAT EXCAVATED AND COMPACTED TO THE SPECIFIED DENSITY BY THE CONTRACTOR.
4. COMPACTION REQUIREMENTS AS SPECIFIED WILL BE BY PERCENT OF THE MAXIMUM WET DENSITY AND AS DETERMINED PER CALTRANS STANDARD SPECIFICATIONS CAL 216 AND CAL 231.
5. IN PAVED AND SHOULDER AREAS, SUBGRADE WITHIN 30 INCHES OF FINAL GRADE SHALL BE COMPACTED TO 95% AND BACKFILLS AND FILLS MORE THAN 30 INCHES BELOW FINAL GRADE SHALL BE COMPACTED TO 90%.
6. IN NON-PAVED AREAS OUTSIDE COUNTY ROAD RIGHT OF WAY, BACKFILLS AND FILLS SHALL BE COMPACTED TO 90%.
7. BACKFILL AND FILLS CONTAINED WITHIN 5 FEET OF BUILDING FOOTPRINT SHALL BE COMPACTED TO 95% RC PER CALTRANS METHODS ASSUMING GRANULAR FILL IS USED
8. PLACE BACKFILL AND FILL SOIL MATERIALS IN LOOSE LIFTS OF NOT MORE THAN 8 INCHES FOR MATERIAL COMPACTED BY HEAVY COMPACTION EQUIPMENT, AND NOT MORE THAN 6 INCHES FOR MATERIAL COMPACTED BY HAND-OPERATED TAMPERS.
9. THE GROUND SURFACE IN AREAS TO RECEIVE FILL SHALL BE PREPARED AS FOLLOWS:
    - 9.1. ALL ORGANIC MATERIAL AND TOPSOIL SHALL BE REMOVED.
    - 9.2. ON SLOPES GREATER THAN 1V:4H, HORIZONTAL BENCHES SHALL BE CUT INTO THE SOIL TO PROVIDE LEVEL BEARING SURFACE FOR THE FILL MATERIAL. THE MINIMUM WIDTH OF THE BENCHES SHALL BE FOUR FEET.
    - 9.3. AREAS SHALL BE PROOF-ROLLED TO ACHIEVE 90% RC, WITH NO PUMPING OBSERVED.
10. CONCRETE SHALL HAVE A 28-DAY COMPRESSIVE STRENGTH OF 2,500 PSI.
11. ALL TESTS AND INSPECTIONS SHALL BE PERFORMED BY A CALIFORNIA REGISTERED CIVIL ENGINEER OR AN INDEPENDENT INSPECTION AGENCY.

GRADING AND ACCESSIBILITY NOTES

1. CROSS SLOPES SHALL NOT EXCEED 1.5% FOR ALL WALKS. CHANGES IN DIRECTION SHALL BE MAX 1.5% IN ANY DIRECTION.
2. ALL CONCRETE WALKS AND RAMP SURFACES SHALL BE BROOM FINISHED OR OTHER SLIP RESISTANT FINISH.
3. CHANGES IN LEVEL ALONG ACCESSIBLE PATHS OF ¼" HIGH MAXIMUM SHALL BE PERMITTED TO BE VERTICAL WITHOUT EDGE TREATMENT. CHANGES IN LEVEL BETWEEN ¼" AND ½" HIGH MAXIMUM SHALL BE BEVELED WITH A SLOPE NOT STEEPER THAN 2:1. NO CHANGES IN LEVEL OF GREATER THAN ½" VERTICAL SHALL BE ALLOWED.
4. RAMP RUNS SHALL HAVE A RUNNING SLOPE NOT STEEPER THAN 8.3%.
5. THRESHOLD AT DOORWAYS SHALL BE ½" HIGH MAXIMUM.
6. LANDINGS AT EXTERIOR DOORS MAX SLOPE 1.5% IN ALL DIRECTIONS.
7. OPENINGS IN GROUND SURFACE OF ACCESSIBLE PATHS SHALL NOT ALLOW PASSAGE OF A SPHERE MORE THAN ½" DIAMETER.
8. ALL TESTS AND INSPECTIONS (I.E. FILL) SHALL BE PERFORMED BY A CALIFORNIA REGISTERED CIVIL ENGINEER OR AN INDEPENDENT INSPECTION AGENCY.
9. GRADING AND BUILDING FOUNDATION SUBGRADE SHALL BE PERFORMED IN ACCORDANCE WITH THE PROJECT SOILS REPORT AND PROJECT SPECIFICATIONS, AS APPLICABLE.
10. FOOTINGS ARE TO BE INSPECTED BY A REGISTERED CIVIL ENGINEER PRIOR TO PLACEMENT OF CONCRETE.
11. NET CUT/FILL ESTIMATED TO BE CUBIC YARDS .

EROSION CONTROL NOTES

1. SEDIMENT AND EROSION CONTROL WILL BE CONFIGURED, AS APPROVED BY THE CITY, DURING CONSTRUCTION TO BEST FIT THE CURRENT STATE OF THE PROJECT.
2. ALL EROSION AND SEDIMENT CONTROL MEASURES SHALL BE INSPECTED BY THE ENGINEER OF RECORD. THE CONTRACTOR IS RESPONSIBLE FOR IMPLEMENTING ALL EROSION AND SEDIMENT CONTROL MEASURES.
3. THE EROSION AND SEDIMENT CONTROL MEASURES SHALL BE, AT A MINIMUM, OPERABLE DURING THE RAINY SEASON (OCTOBER 15-APRIL 15).
4. ALL SURFACE WATER DRAINAGE SHOULD BE CONTROLLED TO FLOW AWAY FROM THE ADJACENT PROPERTIES. ALL GRADING, EROSION AND SEDIMENT CONTROL SHALL BE IN ACCORDANCE WITH HUMBOLDT COUNTY LAND USE AND DEVELOPMENT ORDINANCE, SECTION 331-14. TRUCKS AND EQUIPMENT SHALL BE CLEANED BEFORE LEAVING THE SITE SO AS NO DIRT IS TRACKED OFF THE SITE. THE SITE SHALL BE CLEANED UP DAILY. BEST MANAGEMENT PRACTICES SHALL BE EMPLOYED AS NECESSARY TO PROTECT ADJACENT PROPERTIES, ROADWAYS AND DRAINAGE STRUCTURES FROM SEDIMENT INTRUSION.
5. ALL LOOSE SOIL AND DEBRIS SHALL BE REMOVED FROM THE STREET AREAS UPON STARTING OPERATIONS AND DAILY THEREAFTER AS DIRECTED BY THE INSPECTOR. ALL ENTRANCES SHALL BE MAINTAINED IN A CONDITION THAT WILL PREVENT TRACKING OR FLOWING OF SEDIMENT ONTO PUBLIC RIGHTS-OF-WAY.
6. AFTER SEWER AND UTILITY TRENCHES ARE BACKFILLED AND COMPACTED, THE SURFACES OVER SUCH TRENCHES SHALL BE MOUNDED SLIGHTLY TO PREVENT CHANNELING OF WATER IN THE TRENCH AREA.
7. APPLY VEGATATIVE STABILIZATION (I.E. MULCH AND/OR TEMPORARY SEEDING AS APPROVED BY ENGINEER) WITHIN 7 DAYS OF LAND CLEARING OR GRADING TO ANY PORTION OF THE SITE THAT IS PLANNED TO BE IDLE FOR MORE THAN 45 DAYS.
8. THE EROSION AND SEDIMENT CONTROL MEASURES SHALL BE INSTALLED PER THE DETAILS SHOWN ON THESE PLANS, AND MAINTAINED IN WORKING CONDITION.
9. DURING THE RAINY SEASON, ALL PAVED AREAS WILL BE KEPT CLEAR OF EARTH MATERIAL AND DEBRIS. THE SITE WILL BE MAINTAINED SO THAT SEDIMENT-LADEN RUNOFF DOESN'T ENTER THE STORM DRAINAGE SYSTEM.
10. CONTRACTOR SHALL HAVE TOOLS, EQUIPMENT, AND MATERIALS TO PROVIDE EROSION CONTROL MEASURES MADE NECESSARY BY A CONSTRUCTION OPERATION, ON THE JOB SITE BEFORE BEGINNING THAT OPERATION.
11. ADJACENT PROPERTIES SHALL BE PROTECTED FROM STORM WATERS, MUD, SILT, ETC. ON A DAILY BASIS.
12. FUGITIVE DUST SHALL BE CONTROLLED AT ALL TIMES DURING CONSTRUCTION AND UNTIL FINAL COMPLETION. THE CONTRACTOR, WHEN HE/SHE OR HIS/HERS SUBCONTRACTOR ARE OPERATING EQUIPMENT ON SITE, SHALL PREVENT FORMATION OF EXCESSIVE AIRBORNE NUISANCES BY WATERING AND/OR TREATING THE SITE OF THE WORK IN SUCH A MANNER THAT WILL CONFIRM DUST PARTICLES TO THE IMMEDIATE SURFACE OF THE WORK. THE CONTRACTOR WILL BE RESPONSIBLE FOR ANY DAMAGE CAUSED BY DUST FROM HIS OWN ACTIVITIES OR HIS SUBCONTRACTORS ACTIVITIES IN PERFORMING THE WORK UNDER THIS CONTRACT AND SHALL BE RESPONSIBLE FOR ANY CITATIONS, FINES, OR CHARGES RESULTING FROM DUST NUISANCES. DUST CONTROL WILL BE DONE ON A DAILY BASIS.
13. DUST CONTROL DURING CONSTRUCTION. (FROM CITY DOCUMENT)
    - A. WATER ALL ACTIVE CONSTRUCTION AREAS TWCE PER DAY AND USE EROSION CONTROL MEASURES TO PREVENT WATER RUNOFF CONTAINING SILT AND DEBRIS FROM ENTERING THE STORM DRAIN SYSTEM.
    - B. COVER TRUCKS HAULING SOIL, SAND, AND OTHER LOOSE MATERIAL.
    - C. PAVE, WATER, OR APPLY NON-TOXIC SOIL STABILIZERS ON UNPAVED ACCESS ROADS AND PARKING AREAS.
    - D. SWEEP PAVED ACCESS ROADS AND PARKING AREAS DAILY.
    - E. SWEEP STREETS DAILY IF VISIBLE MATERIAL IS CARRIED ONTO ADJACENT PUBLIC STREETS.
    - F. REUSE ONSITE CONSTRUCTION MATERIALS AS PERMITTED TO REDUCE OFFSITE VEHICLE TRIPS TO LANDFILLS.
    - G. CONSTRUCTION EQUIPMENT POWERED BY INTERNAL COMBUSTION ENGINES SHALL BE KEPT TUNED AND SHALL USE BIOFUELS WHERE FEASIBLE TO MINIMIZE EMISSIONS.
12. RUMBLE AND VEHICLE WASHDOWN ARE RECOMMENDED AT ALL EXITS FROM SITE.
13. ASBESTOS AND LEAD CONTAMINATED MATERIALS ENCOUNTERED DURING DEMOLITION OF EXISTING STRUCTURES SHALL BE HAULED TO A FACILITY THAT ACCEPTS SAID MATERIALS.
14. ANY WASH DOWN LIQUIDS USED SHALL BE PREVENTED FROM FLOWING OFF SITE WITH APPROPRIATE MEANS.

SPECIAL INSPECTIONS:

1. THE OWNER SHALL EMPLOY ONE OR MORE SPECIAL INSPECTORS TO PROVIDE INSPECTIONS DURING CONSTRUCTION. THE SPECIAL INSPECTOR SHALL BE A QUALIFIED PERSON WHO SHALL DEMONSTRATE COMPETENCE, TO THE SATISFACTION OF THE BUILDING OFFICIAL, FOR INSPECTION OF THE PARTICULAR TYPE OF CONSTRUCTION OR OPERATION REQUIRING SPECIAL INSPECTION.
2. SPECIAL INSPECTIONS ARE NOT REQUIRED WHERE THE WORK IS DONE ON THE PREMISES OF A FABRICATOR REGISTERED AND APPROVED TO PERFORM SUCH WORK WITHOUT SPECIAL INSPECTION. APPROVED FABRICATORS MUST SUBMIT A CERTIFICATE OF COMPLIANCE FOR OFFSITE FABRICATIONS SUCH AS STRUCTURAL STEEL, PRECAST CONCRETE, GLUED LAMINATED TIMBER, ETC.
3. ALL INSPECTIONS SHALL BE PERFORMED BY INDEPENDENT SPECIAL INSPECTORS. JOB SITE VISITS BY THE STRUCTURAL ENGINEER OR BUILDING OFFICIAL DO NOT CONSTITUTE AND ARE NOT A SUBSTITUTE FOR INSPECTIONS BY A SPECIAL INSPECTOR.
4. ALL INSPECTION REPORTS SHALL BE SUBMITTED TO THE BUILDING OFFICIAL AND EOR. THE FINAL REPORTS BY THE SPECIAL INSPECTOR(S) MUST CERTIFY THAT THE ENTIRE STRUCTURAL SYSTEM COMPLIES WITH THE APPROVED PLANS AND SPECIFICATIONS.
5. IT IS SOLELY THE CONTRACTOR'S RESPONSIBILITY TO SEE THAT THESE INSPECTIONS ARE PERFORMED.
6. WORK REQUIRING SPECIAL INSPECTION SHALL BE INSPECTED BY THE SPECIAL INSPECTOR WHO IS PRESENT IN THE AREA WHERE THE WORK IS PERFORMED AND AT THE COMPLETION OF WORK. CONTINUOUS INSPECTION CONSISTS OF FULL-TIME INSPECTION; PERIODIC INSPECTION CONSISTS OF PART-TIME OR INTERMITTENT INSPECTION.
7. THE FOLLOWING SPECIAL INSPECTIONS ARE IN ADDITION TO INSPECTIONS BY THE BUILDING OFFICIAL. THIS LIST IS NOT INTENDED TO BE ALL INCLUSIVE.

SOILS SUPPORTING FOUNDATIONS

PERIODIC:	VERIFY MATERIALS BELOW FOOTINGS ARE ADEQUATE TO ACHIEVE THE DESIGN BEARING CAPACITY
PERIODIC:	VERIFY EXCAVATIONS ARE EXTENDED TO PROPER DEPTH AND HAVE REACHED PROPER MATERIAL
PERIODIC:	PERFORM CLASSIFICATION AND TESTING OF CONTROLLED FILL MATERIALS
CONT:	VERIFY USE OF PROPER MATERIALS, DENSITIES AND LIFT THICKNESSES DURING PLACEMENT AND COMPACTION OF CONTROLLED FILLS
PERIODIC:	PRIOR TO PLACEMENT OF CONTROLLED FILL, INSPECT SUBGRADE AND VERIFY THAT SITE HAS BEEN PREPARED PROPERLY

STRUCTURAL CONCRETE

PERIODIC:	INSPECTION OF REINFORCING STEEL AND PLACEMENT
CONT:	INSPECT BOLTS TO BE INSTALLED IN CONCRETE PRIOR TO AND DURING PLACEMENT OF CONCRETE
PERIODIC:	VERIFY USE OF REQUIRED DESIGN MIX
CONT:	SAMPLING FRESH CONCRETE AND PERFORMING SLUMP AND AIR CONTENT TESTS AND DETERMINING THE TEMPERATURE OF FRESH CONCRETE AT THE TIME OF MAKING SPECIMENS FOR STRENGTH TESTS
CONT:	INSPECTION OF CONCRETE AND SHOTCRETE PLACEMENT FOR PROPER APPLICATION TECHNIQUES
PERIODIC:	INSPECTION FOR MAINTENANCE OF SPECIFIED CURING TEMPERATURE AND TECHNIQUE
PERIODIC:	VERIFICATION OF IN-SITU CONCRETE STRENGTH, PRIOR TO REMOVAL OF SHORES AND FORMS FROM BEAMS AND STRUCTURAL SLABS
PERIODIC:	INSPECT FORMWORK FOR SHAPE, LOCATION AND DIMENSIONS OF THE CONCRETE MEMBER BEING FORMED
PERIODIC:	ERECTION OF PRECAST CONCRETE MEMBERS
PERIODIC:	POST-INSTALLED AND ADHESIVE ANCHORS
CONT:	(DSA / OSHPD] POST-INSTALLED AND ADHESIVE ANCHORS

SEISMIC RESISTANCE

PERIODIC:	WOOD SHEAR WALLS, PANELS, DIAPHRAGMS, COLLECTORS AND HOLDOWNS WHERE FASTENER SPACING OF THE SHEATHING IS FOUR INCHES ON CENTER OR LESS

STEEL CONSTRUCTION

CONT.:	ALL WELDING, EXCEPT WHERE WELDS ARE PERFORMED IN AN APPROVED FABRICATOR'S SHOP

LEVEL 1 MASONRY

PERIODIC:	COMPLIANCE WITH REQUIRED INSPECTION PROVISIONS OF THE CONSTRUCTION DOCUMENTS AND THE APPROVED SUBMITTALS SHALL BE VERIFIED.
PERIODIC:	VERIFICATION OF fm PRIOR TO CONSTRUCTION EXCEPT WHERE SPECIFICALLY EXEMPTED BY THE CBC.

AS MASONRY CONSTRUCTION BEGINS, THE FOLLOWING SHALL BE VERIFIED TO ENSURE COMPLIANCE:

PERIODIC:	A. PROPORTIONS OF SITE-PREPARED MORTAR.
PERIODIC:	B. CONSTRUCTION OF MORTAR JOINTS.
PERIODIC:	C. LOCATION OF REINFORCEMENT, CONNECTORS, PRESTRESSING TENDONS, AND ANCHORAGES.

VERIFY:

PERIODIC:	A. SIZE AND LOCATION OF STRUCTURAL ELEMENTS.
PERIODIC:	B. TYPE, SIZE, AND LOCATION OF ANCHORS, INCLUDING OTHER DETAILS OF ANCHORAGE OF MASONRY TO STRUCTURAL MEMBERS, FRAMES OR OTHER CONSTRUCTION.
PERIODIC:	C. SPECIFIED SIZE, GRADE, AND TYPE OF REINFORCEMENT.

PRIOR TO GROUTING VERIFY THE FOLLOWING TO VERIFY COMPLIANCE:

PERIODIC:	A. GROUT SPACE IS CLEAN.
PERIODIC:	B. PLACEMENT OF REINFORCEMENT AND CONNECTORS AND PRESTRESSING TENDONS AND ANCHORAGES.
PERIODIC:	C. PROPORTIONS OF SITE-PREPARED GROUT AND PRESTRESSING GROUT FOR BONDED TENDONS.
PERIODIC:	D. CONSTRUCTION OF MORTAR JOINTS.
CONTINUOUS:	VERIFY GROUT PLACEMENT TO ENSURE COMPLIANCE WITH CODE AND CONSTRUCTION DOCUMENT PROVISIONS.
CONTINUOUS:	OBSERVE PREPARATION OF REQUIRED GROUT SPECIMENS, MORTAR SPECIMENS, AND/OR PRISMS.
PERIODIC:	VERIFY COMPLIANCE WITH REQUIRED INSPECTION PROVISIONS OF THE CONSTRUCTION DOCUMENTS AND THE APPROVED SUBMITTALS.

LOCATIONS AND ELEVATIONS SHOWN ARE PROVIDED FOR INFORMATION ONLY. SUCH INFORMATION MAY NOT BE COMPLETE OR ACCURATE. CONTRACTOR IS RESPONSIBLE FOR CONTACTING ALL AGENCIES INVOLVED AND VERIFYING LOCATIONS OF ALL UTILITIES THAT MAY BE IMPACTED BY HIS/HER WORK.

UNAUTHORIZED CHANGES & USES: THE ENGINEER PREPARING THESE PLANS WILL NOT BE RESPONSIBLE FOR, OR LIABLE FOR, UNAUTHORIZED CHANGES TO OR USES OF THESE PLANS. ALL CHANGES TO THE PLANS MUST BE IN WRITING AND MUST BE APPROVED BY THE PREPARER OF THESE PLANS.

FOR PLAN REVIEW ONLY - NOT FOR CONSTRUCTION

PLANS CERTIFIED FOR CONSTRUCTION BY ENGINEER OF RECORD ON _____ SIGNATURE

REVISIONS	BY

PACIFIC AFFILIATES
CONSULTING ENGINEERS
900 W. WATERFRONT DRIVE, EUREKA, CA 95501
TEL (707) 445-3001 • FAX (707) 445-3003

REGISTERED PROFESSIONAL ENGINEER L. SCHNEIDER EXP. 12-31-2020 STATE OF CALIFORNIA CIVIL
PRELIMINARY

NOTES

PACIFIC AFFILIATES, INC. HEREBY EXPRESSLY RESERVES ITS COMMON LAW COPYRIGHT AND OTHER PROPERTY RIGHTS IN THESE PLANS AND DRAWINGS AND NOT TO BE REPRODUCED, CHANGED OR COPIED IN ANY FORM OR MANNER WHATSOEVER, NOR ASSIGNED TO ANY THIRD PARTY, WITHOUT FIRST OBTAINING THE EXPRESS WRITTEN PERMISSION OF PACIFIC AFFILIATES, INC. IN THE EVENT OF UNAUTHORIZED REUSE BY ANY PARTY WITHOUT PRIOR OBTAINING WRITTEN PERMISSION AND CONSENT

CITY OF EUREKA
WATERFRONT DRIVE
EUREKA, CA 95501
APN 002-241-013

Date: DECEMBER 4, 2020
Scale: AS NOTED
Drawn by: NM

SHEET NUMBER
G-1.1

JOB NUMBER
20-2334

EXISTING SITE KEYNOTES

1. EXISTING ASPHALT PARKING LOT UNDER BRIDGE TO BE PULVERIZED AND REPAVED.
2. EXISTING DRAIN INLETS TO BE REPLACED.
3. EXISTING FIRE DEPARTMENT CONNECTION, DOUBLE CHECK VALVE AND SERVICE LINE TO BE REMOVED.
4. EXISTING STEEL PIPE BOLLARD TO BE REMOVED.
5. EXISTING VEHICLE ACCESS TO BE ABANDONED.
6. EXISTING SEWER CLEANOUTS TO BE REMOVED. EXISTING SEWER LATERAL PIPE TO BE ABANDONED.
7. EXISTING WATER METER TO REMAIN. EXISTING SERVICE LINE TO EXISTING RESTROOM TO BE ABANDONED. EXACT SERVICE LINE LOCATION UNKNOWN AND THEREFORE NOT SHOWN.

LOCATIONS AND ELEVATIONS SHOWN ARE PROVIDED FOR INFORMATION ONLY. SUCH INFORMATION MAY NOT BE COMPLETE OR ACCURATE. CONTRACTOR IS RESPONSIBLE FOR CONTACTING ALL AGENCIES INVOLVED AND VERIFYING LOCATIONS OF ALL UTILITIES THAT MAY BE IMPACTED BY HIS/HER WORK.

UNAUTHORIZED CHANGES & USES: THE ENGINEER PREPARING THESE PLANS WILL NOT BE RESPONSIBLE FOR, OR LIABLE FOR, UNAUTHORIZED CHANGES TO OR USES OF THESE PLANS. ALL CHANGES TO THE PLANS MUST BE IN WRITING AND MUST BE APPROVED BY THE PREPARER OF THESE PLANS.

FOR PLAN REVIEW ONLY - NOT FOR CONSTRUCTION

PLANS CERTIFIED FOR CONSTRUCTION BY ENGINEER OF RECORD ON _____ SIGNATURE

REVISIONS	BY

PACIFIC AFFILIATES
CONSULTING ENGINEERS
900 W. WATERFRONT DRIVE · EUREKA, CA 95501
TEL (707) 445-3001 · FAX (707) 445-3003

REGISTERED PROFESSIONAL ENGINEER CHRISTOPHER L. SCHNEIDER No. 12103 EXP. 12-31-2020 STATE OF CALIFORNIA

PRELIMINARY

EXISTING SITE PLAN AND DEMOLITION PLAN

PACIFIC AFFILIATES, INC. HEREBY EXPRESSLY RESERVES ITS COMMON LAW COPYRIGHT AND OTHER PROPERTY RIGHTS IN THESE PLANS AND DRAWINGS. THESE PLANS AND DRAWINGS ARE NOT TO BE REPRODUCED, CHANGED OR COPIED IN ANY FORM OR MANNER WHATSOEVER, NOR ARE THEY TO BE ASSIGNED TO ANY THIRD PARTY, WITHOUT FIRST OBTAINING THE EXPRESS WRITTEN PERMISSION OF PACIFIC AFFILIATES, INC. FOR ANY REUSE OR ASSIGNMENT TO ANY THIRD PARTY, WITHOUT FIRST OBTAINING WRITTEN PERMISSION AND CONSENT

CITY OF EUREKA
WATERFRONT DRIVE
EUREKA, CA 95501
APN 002-241-013

Date: DECEMBER 4, 2020
Scale: AS NOTED
Drawn by: NM

SHEET NUMBER C-1

JOB NUMBER 20-2334

KEYNOTES

1. NEW CURB, SEE DETAIL B, SHEET C-7.1.
2. PULVERIZE 0.3' <E> ASPHALT PAVING, PLACE 0.3' <N> ASPHALT PAVING..
3. NEW SIDEWALK, SEE DETAIL A, SHEET C-7.1.
4. DETECTABLE WARNING, SEE DETAIL D, SHEET C-7.2.
5. NEW 45°.PARKING STRIPING, SEE DETAIL C, SHEET C-7.1.
6. REPLACE STEEL BOLLARD IN KIND W/ EXISTING.

HUMBOLDT BAY

<E> ±108' FLOATING WOOD DOCK

<N> FLOATING DOCK AND GANGWAY, SEE SHEET C-3.2

ESTUARINE AND MARINE WETLAND PER NWI

APPROX. TOP OF BANK

MHHW AT 7.13 FEET PER WETLAND DELINEATION

<E> DOCK

69.41
N89° 32' 35"W

92.55
S85° 46' 25"W

109.45
S70° 43' 49"W

<E> 10.0' PAVED WATERFRONT TRAIL

10.0' PUBLIC ACCESS & PASSIVE RECREATIONAL EASEMENT PER 1762 O.R. 1420

20.00' STORM DRAIN EASEMENT PER 1999-18726-4

278.06
S58° 20' 12"W

CITY OF EUREKA APN 002-241-006

20.00' EASEMENT PER 1751 O.R. 478

199.05
S66° 26' 57"W

<E> GRAVEL

<N> 1150 SQ. FT. OFFICE/LAUNDRY BUILDING

CITY OF EUREKA APN 002-241-015

285.27
S19° 11' 36"E

CCC WETLAND PER WETLAND DELINEATION REPORT BY SHN

<E> CONC. SLAB

<E> STRUCTURE

<N> 60'X60' TEMPORARY MATERIAL AND EQUIPMENT STORAGE AREA WITH 8' CHAINLINK SECURITY FENCE

SEE DETIAL, SHEET C-3.1

<N> PUBLIC RESTROOM AND AQUATIC RESPONSE CENTER 1,512 SF

<N> AC PAVING ±575 SQ. FT.

<N> 5.0' SWK FROM STREET TO PUBLIC RESTROOM TO WATERFRONT TRAIL

CITY OF EUREKA PORTION OF 002-241-013

CITY OF EUREKA APN 002-241-006

<E> 10.0' PAVED WATERFRONT TRAIL

40.99
N75° 56' 24"E

123.49
N62° 54' 59"E

88.66
N56° 36' 04"E

57.58
N35° 45' 26"E

END <N> CURB AT <E> TRAIL

EUREKA REDEVELOPMENT AGENCY APN 002-241-007

S10° 46' 00"E
303.77

END <E> CURB BEGIN <N> CURB

14'-6"

33'-5"

5'

R=960.20
L=402.43
Δ=24°00'36"

<N> AC PAVING ±37,095 SQ. FT.

47.27
N89° 58' 54"E

S0° 01' 06"E
216.63

L=367.96, R=1740.19
Δ=12°06'55"

145'

L=120.32, R=530.00
Δ=13°00'25"

L=60.70, R=530.00
Δ=6°33'45"

24'

L=54.42, R=530.00
Δ=5°52'58"

L=104.39, R=470.00
Δ=12°43'34"

86.63
S77° 15' 34"W

WATERFRONT DRIVE

<E> SWK

<N> TEMPORARY TRAFFIC BARRIERS DURING CONSTRUCTION ACTIVITIES

L=104.39, R=470.00
Δ=12°43'34"

N77° 15' 34"E
290.37

L=179.42, R=2927.04
Δ=3°30'43"

CITY OF EUREKA APN 002-241-008

NORTHWESTERN PACIFIC RAILROAD CO. APN 002-055-002

NORTHWESTERN PACIFIC RAILROAD CO. APN 002-051-002

CHARLES & REBECCA AALFS APN 002-054-005

THOMAS & PATRICIA WILWERDING APN 002-054-009

APN 002-054-006

THOMAS & PATRICIA WILWERDING APN 002-054-011

0 20 40
SCALE IN FEET
1" = 40'
NOTE: IF SCALE BAR DOES NOT MEASURE 1 INCH PLANS ARE NOT TO SCALE

LOCATIONS AND ELEVATIONS SHOWN ARE PROVIDED FOR INFORMATION ONLY. SUCH INFORMATION MAY NOT BE COMPLETE OR ACCURATE. CONTRACTOR IS RESPONSIBLE FOR CONTACTING ALL AGENCIES INVOLVED AND VERIFYING LOCATIONS OF ALL UTILITIES THAT MAY BE IMPACTED BY HIS/HER WORK.

SITE PLAN
SCALE: 1" = 40'

UNAUTHORIZED CHANGES & USES: THE ENGINEER PREPARING THESE PLANS WILL NOT BE RESPONSIBLE FOR, OR LIABLE FOR, UNAUTHORIZED CHANGES TO OR USES OF THESE PLANS. ALL CHANGES TO THE PLANS MUST BE IN WRITING AND MUST BE APPROVED BY THE PREPARER OF THESE PLANS.

FOR PLAN REVIEW ONLY - NOT FOR CONSTRUCTION

PLANS CERTIFIED FOR CONSTRUCTION BY ENGINEER OF RECORD ON _____ SIGNATURE

REVISIONS	BY

PACIFIC AFFILIATES
CONSULTING ENGINEERS
900 W. WATERFRONT DRIVE · EUREKA, CA 95501
TEL (707) 445-3001 · FAX (707) 445-3003

REGISTERED PROFESSIONAL ENGINEER L. SCHNEIDER No. 23603 EXP. 12-31-2020 STATE OF CALIFORNIA CIVIL

PRELIMINARY

PACIFIC AFFILIATES, INC. HEREBY EXPRESSLY RESERVES ITS COMMON LAW COPYRIGHT AND OTHER PROPERTY RIGHTS IN THESE PLANS. THESE PLANS AND DRAWINGS ARE NOT TO BE REPRODUCED, CHANGED OR COPIED IN ANY FORM OR MANNER WHATSOEVER, NOR ARE THEY TO BE ASSIGNED TO ANY THIRD PARTY, WITHOUT FIRST OBTAINING THE EXPRESS WRITTEN PERMISSION OF PACIFIC AFFILIATES. IN THE EVENT OF UNAUTHORIZED REUSE BY OTHERS OR BY ANY THIRD PARTY, WITHOUT FIRST OBTAINING WRITTEN PERMISSION AND CONSENT

SITE PLAN

CITY OF EUREKA
WATERFRONT DRIVE
EUREKA, CA 95501
APN 002-241-013

Date: DECEMBER 4, 2020
Scale: AS NOTED
Drawn by: NM

SHEET NUMBER C-2

JOB NUMBER 20-2334

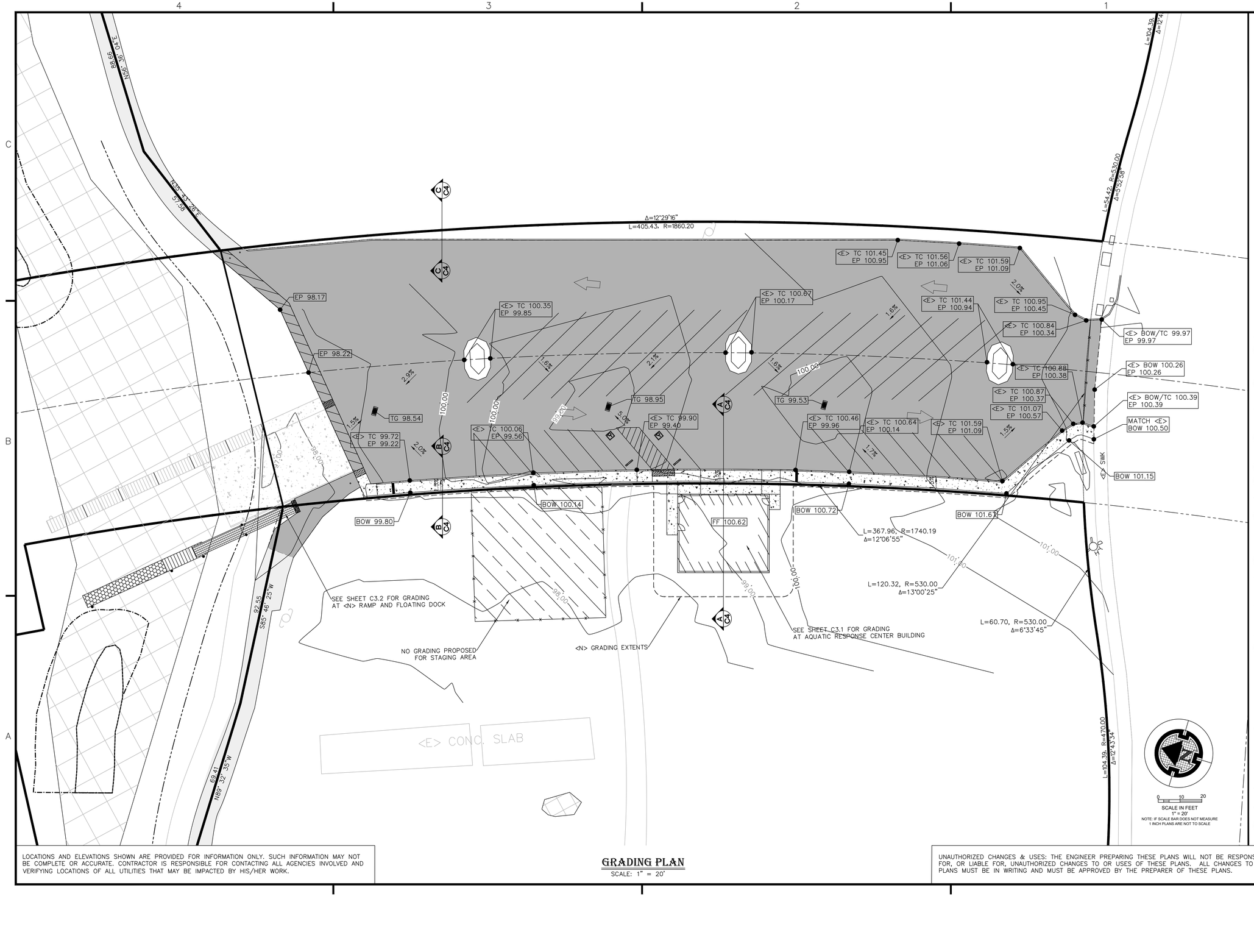

LOCATIONS AND ELEVATIONS SHOWN ARE PROVIDED FOR INFORMATION ONLY. SUCH INFORMATION MAY NOT BE COMPLETE OR ACCURATE. CONTRACTOR IS RESPONSIBLE FOR CONTACTING ALL AGENCIES INVOLVED AND VERIFYING LOCATIONS OF ALL UTILITIES THAT MAY BE IMPACTED BY HIS/HER WORK.

GRADING PLAN

SCALE: 1" = 20'

UNAUTHORIZED CHANGES & USES: THE ENGINEER PREPARING THESE PLANS WILL NOT BE RESPONSIBLE FOR, OR LIABLE FOR, UNAUTHORIZED CHANGES TO OR USES OF THESE PLANS. ALL CHANGES TO THE PLANS MUST BE IN WRITING AND MUST BE APPROVED BY THE PREPARER OF THESE PLANS.

FOR PLAN REVIEW ONLY - NOT FOR CONSTRUCTION

PLANS CERTIFIED FOR CONSTRUCTION BY ENGINEER OF RECORD ON _____ SIGNATURE

REVISIONS	BY

PACIFIC AFFILIATES
CONSULTING ENGINEERS
900 W. WATERFRONT DRIVE · EUREKA, CA 95501
TEL (707) 445-3001 • FAX (707) 445-3003

REGISTERED PROFESSIONAL ENGINEER
L. SCHNEIDER
EXP. 12-31-2020
STATE OF CALIFORNIA
CIVIL
PRELIMINARY

GRADING, DRAINAGE & EROSION CONTROL PLAN

PACIFIC AFFILIATES, INC. HEREBY EXPRESSLY RESERVES ITS COMMON LAW COPYRIGHT AND OTHER PROPERTY RIGHTS IN THESE PLANS. THESE PLANS AND DRAWINGS ARE NOT TO BE REPRODUCED, CHANGED OR COPIED IN ANY FORM OR MANNER WHATSOEVER, NOR ARE THEY TO BE ASSIGNED TO ANY THIRD PARTY, WITHOUT FIRST OBTAINING THE EXPRESS WRITTEN PERMISSION OF PACIFIC AFFILIATES, INC. IN THE EVENT OF UNAUTHORIZED REUSE BY THE THIRD PARTY WITHOUT FIRST OBTAINING WRITTEN PERMISSION AND CONSENT

CITY OF EUREKA
WATERFRONT DRIVE
EUREKA, CA 95501
APN 002-241-013

Date: DECEMBER 4, 2020
Scale: AS NOTED
Drawn by: NM

SHEET NUMBER
C-3

JOB NUMBER
20-2334

KEYNOTES

1. NEW SIDEWALK, SEE DETAIL A, SHEET C-7.1.
2. NEW ACCESSIBLE STALL, SEE DETAIL A, SHEET C-7.2.
3. NEW PRECAST WHEEL BUMBER, DETAIL B, SHEET C-7.2
4. NEW DETECTABLE WARNING, SEE DETAIL D, SHEET C-7.2.
5. PULVERIZE 0.3' <E> ASPHALT PAVING, PLACE 0.3' <N> ASPHALT PAVING..
6. NEW ISA PARKING SIGN, SEE DETAIL C, SHEET C-7.2.
7. NEW DRIVEWAY APPROACH, SEE DETAIL D, SHEET C-7.1.

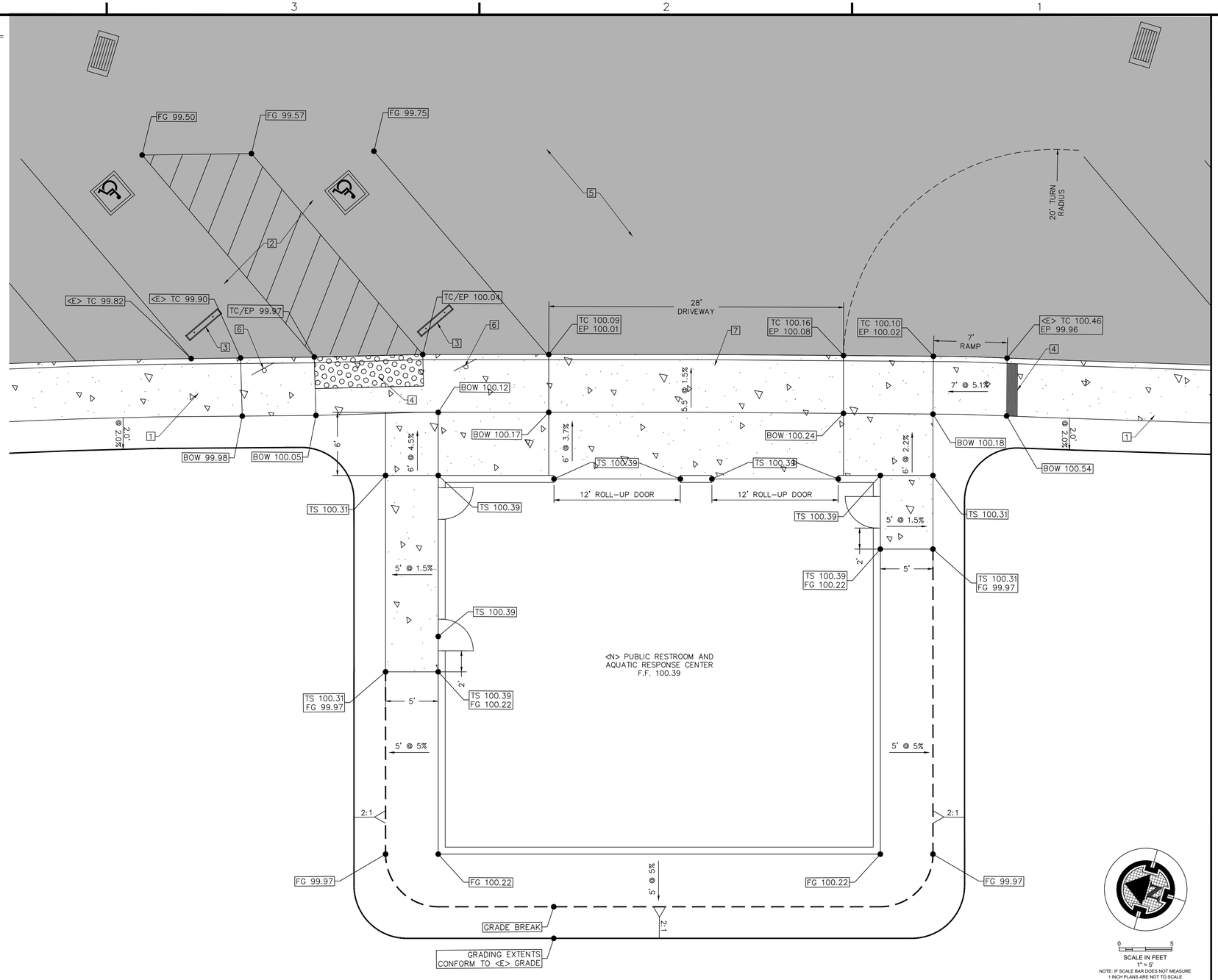

0 5
SCALE IN FEET
1" = 5'
NOTE: IF SCALE BAR DOES NOT MEASURE 1 INCH PLANS ARE NOT TO SCALE

LOCATIONS AND ELEVATIONS SHOWN ARE PROVIDED FOR INFORMATION ONLY. SUCH INFORMATION MAY NOT BE COMPLETE OR ACCURATE. CONTRACTOR IS RESPONSIBLE FOR CONTACTING ALL AGENCIES INVOLVED AND VERIFYING LOCATIONS OF ALL UTILITIES THAT MAY BE IMPACTED BY HIS/HER WORK.

RESTROOM/ARC PLAN
SCALE: 1" = 5'

UNAUTHORIZED CHANGES & USES: THE ENGINEER PREPARING THESE PLANS WILL NOT BE RESPONSIBLE FOR, OR LIABLE FOR, UNAUTHORIZED CHANGES TO OR USES OF THESE PLANS. ALL CHANGES TO THE PLANS MUST BE IN WRITING AND MUST BE APPROVED BY THE PREPARER OF THESE PLANS.

FOR PLAN REVIEW ONLY - NOT FOR CONSTRUCTION
PLANS CERTIFIED FOR CONSTRUCTION BY ENGINEER OF RECORD ON _____ SIGNATURE _____

REVISIONS	BY

PACIFIC AFFILIATES
CONSULTING ENGINEERS
900 W. WATERFRONT DRIVE · EUREKA, CA 95501
TEL (707) 445-3001 • FAX (707) 445-3003

REGISTERED PROFESSIONAL ENGINEER · LEE L. SCHNEIDER · No. C 67203 · EXP. 12-31-2020 · STATE OF CALIFORNIA · CIVIL
PRELIMINARY

RESTROOM & ARC SITE AND GRADING PLAN

PACIFIC AFFILIATES, INC. HEREBY EXPRESSLY RESERVES ITS COMMON LAW COPYRIGHT AND OTHER PROPERTY RIGHTS IN THESE PLANS. THESE PLANS AND DRAWINGS ARE NOT TO BE REPRODUCED, CHANGED OR COPIED IN ANY FORM OR MANNER WHATSOEVER, NOR ARE THEY TO BE ASSIGNED TO ANY THIRD PARTY, WITHOUT FIRST OBTAINING THE EXPRESS WRITTEN PERMISSION OF PACIFIC AFFILIATES, INC. IN ADDITION, THEY SHALL NOT BE REUSED BY THE OWNER OR ANY THIRD PARTY, WITHOUT FIRST OBTAINING WRITTEN PERMISSION AND CONSENT

CITY OF EUREKA
WATERFRONT DRIVE
EUREKA, CA 95501
APN 002-241-013

Date: DECEMBER 4, 2020
Scale: AS NOTED | Drawn by: NM

SHEET NUMBER
C-3.1

JOB NUMBER
20-2334

KEYNOTES

1. NEW SIDEWALK, SEE DETAIL A, SHEET C-7.1.
2. PULVERIZE 0.3' <E> ASPHALT PAVING, PLACE 0.3' <N> ASPHALT PAVING.
3. NEW DETECTABLE WARNING, SEE DETAIL D, SHEET C-7.2.

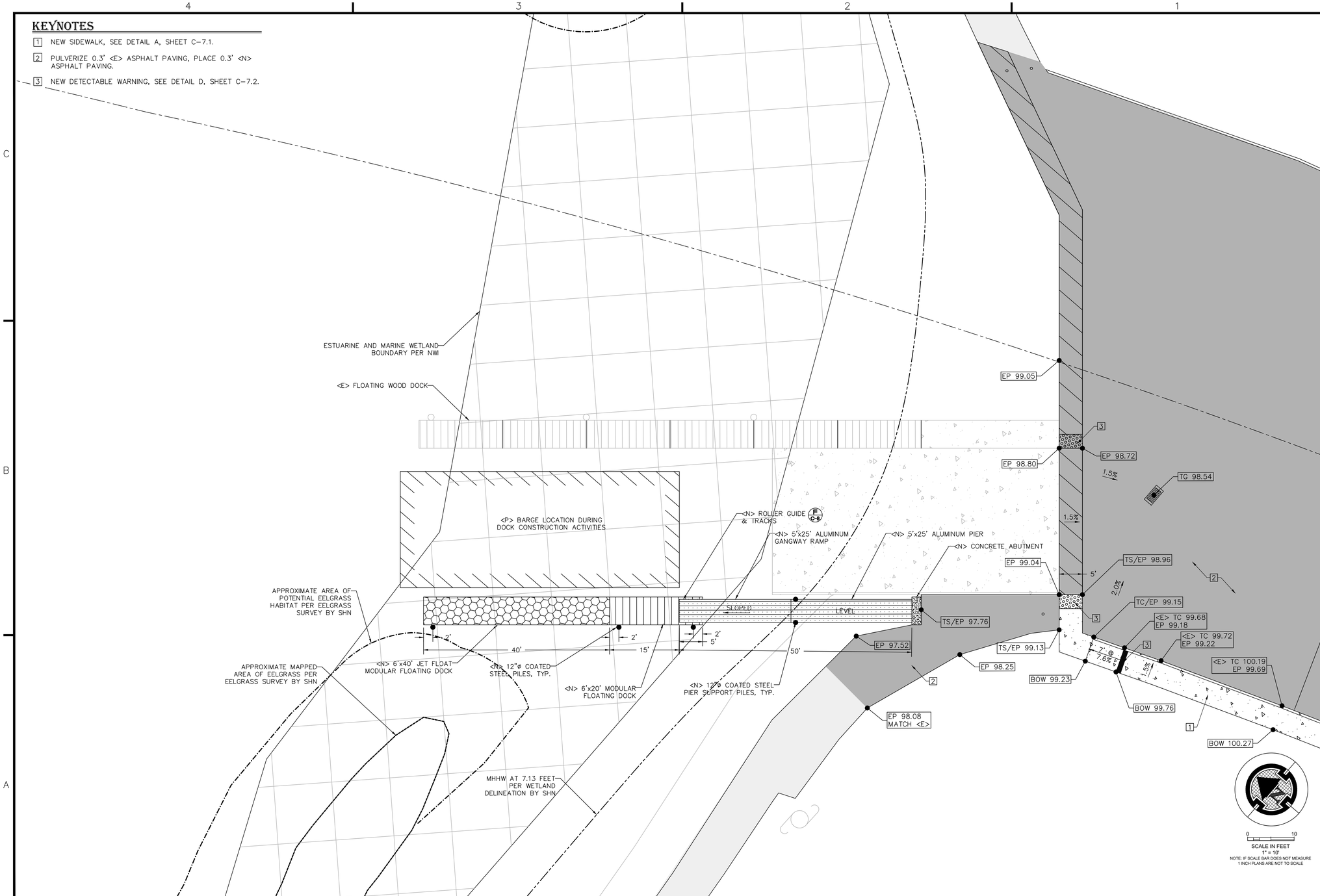

LOCATIONS AND ELEVATIONS SHOWN ARE PROVIDED FOR INFORMATION ONLY. SUCH INFORMATION MAY NOT BE COMPLETE OR ACCURATE. CONTRACTOR IS RESPONSIBLE FOR CONTACTING ALL AGENCIES INVOLVED AND VERIFYING LOCATIONS OF ALL UTILITIES THAT MAY BE IMPACTED BY HIS/HER WORK.

RAMP PLAN
SCALE: 1" = 10'

UNAUTHORIZED CHANGES & USES: THE ENGINEER PREPARING THESE PLANS WILL NOT BE RESPONSIBLE FOR, OR LIABLE FOR, UNAUTHORIZED CHANGES TO OR USES OF THESE PLANS. ALL CHANGES TO THE PLANS MUST BE IN WRITING AND MUST BE APPROVED BY THE PREPARER OF THESE PLANS.

FOR PLAN REVIEW ONLY - NOT FOR CONSTRUCTION

PLANS CERTIFIED FOR CONSTRUCTION BY ENGINEER OF RECORD ON _____ SIGNATURE _____

REVISIONS	BY

PACIFIC AFFILIATES
CONSULTING ENGINEERS
990 W. WATERFRONT DRIVE, EUREKA, CA 95501
TEL (707) 445-3001 • FAX (707) 445-3003

REGISTERED PROFESSIONAL ENGINEER
TRAVIS L. SCHNEIDER
EXP. 12-31-2020
CIVIL
STATE OF CALIFORNIA
PRELIMINARY

RAMP SITE AND GRADING PLAN

PACIFIC AFFILIATES, INC. HEREBY EXPRESSLY RESERVES ITS COMMON LAW COPYRIGHT AND OTHER PROPERTY RIGHTS IN THESE PLANS. THESE PLANS AND DRAWINGS ARE NOT TO BE REPRODUCED, CHANGED OR COPIED IN ANY FORM OR MANNER WHATSOEVER WITHOUT FIRST OBTAINING THE EXPRESS WRITTEN PERMISSION OF PACIFIC AFFILIATES, INC. NOR ARE THEY ASSIGNED TO ANY THIRD PARTY WITHOUT FIRST OBTAINING WRITTEN PERMISSION AND CONSENT.

CITY OF EUREKA
WATERFRONT DRIVE
EUREKA, CA 95501
APN 002-241-013

Date: DECEMBER 4, 2020
Scale: AS NOTED
Drawn by: NM

SHEET NUMBER
C-3.2

JOB NUMBER
20-2334

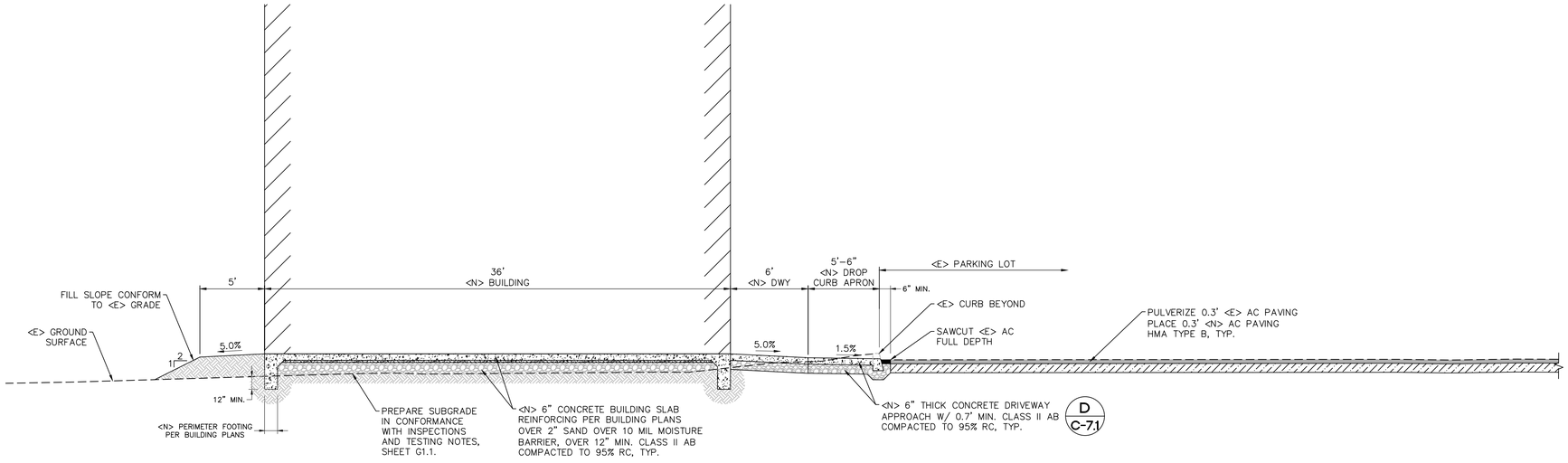

SECTION A-A

SCALE: 1" = 5'

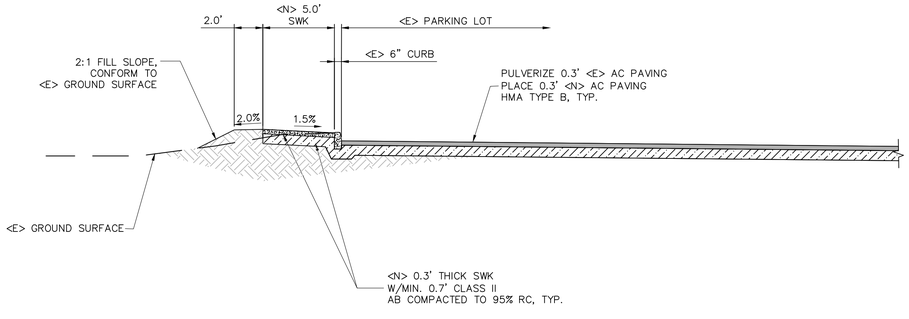

SECTION B-B

SCALE: 1" = 5'

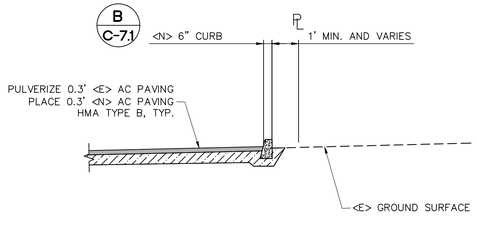

SECTION C-C

SCALE: 1" = 5'

0 2.5 5

SCALE IN FEET
1" = 5'

NOTE: IF SCALE BAR DOES NOT MEASURE
1 INCH PLANS ARE NOT TO SCALE

LOCATIONS AND ELEVATIONS SHOWN ARE PROVIDED FOR INFORMATION ONLY. SUCH INFORMATION MAY NOT BE COMPLETE OR ACCURATE. CONTRACTOR IS RESPONSIBLE FOR CONTACTING ALL AGENCIES INVOLVED AND VERIFYING LOCATIONS OF ALL UTILITIES THAT MAY BE IMPACTED BY HIS/HER WORK.

UNAUTHORIZED CHANGES & USES: THE ENGINEER PREPARING THESE PLANS WILL NOT BE RESPONSIBLE FOR, OR LIABLE FOR, UNAUTHORIZED CHANGES TO OR USES OF THESE PLANS. ALL CHANGES TO THE PLANS MUST BE IN WRITING AND MUST BE APPROVED BY THE PREPARER OF THESE PLANS.

FOR PLAN REVIEW ONLY - NOT FOR CONSTRUCTION

PLANS CERTIFIED FOR CONSTRUCTION BY ENGINEER OF RECORD ON _____ SIGNATURE

REVISIONS	BY

PACIFIC AFFILIATES
CONSULTING ENGINEERS
900 W. WATERFRONT DRIVE · EUREKA, CA 95501
TEL (707) 445-3001 • FAX (707) 445-3003

REGISTERED PROFESSIONAL ENGINEER
L. SCHNEIDER
No. 23203
EXP. 12-31-2020
STATE OF CALIFORNIA
CIVIL
PRELIMINARY

SECTIONS

PACIFIC AFFILIATES, INC. HEREBY EXPRESSLY RESERVES ITS COMMON LAW COPYRIGHT AND OTHER PROPERTY RIGHTS IN THESE PLANS. THESE PLANS AND DRAWINGS ARE NOT TO BE REPRODUCED, CHANGED OR COPIED IN ANY FORM OR MANNER WHATSOEVER, NOR ARE THEY TO BE ASSIGNED TO ANY THIRD PARTY, WITHOUT FIRST OBTAINING THE EXPRESS WRITTEN PERMISSION OF PACIFIC AFFILIATES, INC. IN THE EVENT OF UNAUTHORIZED REUSE OF THESE PLANS BY ANY THIRD PARTY, THE THIRD PARTY AGREES TO HOLD PACIFIC AFFILIATES, INC. HARMLESS FROM ANY DAMAGES RESULTING FROM SUCH UNAUTHORIZED REUSE. IN THE EVENT LEGAL ACTION IS NECESSARY TO ENFORCE THIS PROVISION, PACIFIC AFFILIATES, INC. SHALL BE ENTITLED TO COLLECT FROM THE THIRD PARTY ALL COSTS OF DEFENDING ITS RIGHTS HEREUNDER, INCLUDING REASONABLE ATTORNEY'S FEES AND COSTS. IN ADDITION, THE THIRD PARTY AGREES TO INDEMNIFY PACIFIC AFFILIATES, INC. FOR ANY DAMAGES ARISING FROM THE THIRD PARTY'S WRONGFUL REUSE OF THESE PLANS AND AGREES TO PAY ALL COSTS AND ATTORNEY'S FEES INCURRED BY PACIFIC AFFILIATES, INC. IN ENFORCING THIS PROVISION.

CITY OF EUREKA
WATERFRONT DRIVE
EUREKA, CA 95501
APN 002-241-013

Date:
DECEMBER 4, 2020

Scale:	Drawn by:
AS NOTED	NM

SHEET NUMBER
C-4

JOB NUMBER
20-2334

UTILITY KEYNOTES

SEWER

1. NEW 4" PVC GRAVITY SEWER LATERAL.
2. NEW SEWER CLEANOUT, MATCH PIPE SIZE, DETAIL A, SHEET C-7.4.

WATER

3. NEW 1-1/2" PVC DOMESTIC SERVICE LINE

ELECTRIC, GAS, CABLE, PHONE

4. JOINT UTILITY TRENCH, DETAIL C, SHEET C-7.4

UTILITY NOTES

1. NEW GAS AND ELECTRICAL SERVICE TO BE PROVIDED TO NEW RESTROOM AND AQUATIC RESPONSE CENTER. SERVICE CONNECTION AND JOINT TRENCH LOCATIONS SUBJECT TO APPROVAL BY PG&E.
2. MAINTAIN A MINIMUM OF FIVE FEET BETWEEN DRY UTILITIES (POWER, GAS, CABLE, PHONE) AND WET UTILITIES (WATER, SEWER, STORM DRAIN) WHERE POSSIBLE.
3. ALL SANITARY SEWER LINES SHALL BE INSTALLED AT 2% SLOPE MINIMUM.
4. ALL VALVES NOT PLACED IN SIDEWALK SHALL BE RAISED INTO A CONCRETE COLLAR PER CITY STANDARD DETAILS.

HUMBOLDT BAY

<E> ±108' FLOATING WOOD DOCK

CITY OF EUREKA APN 002-241-006

<E> 10.0' PAVED WATERFRONT TRAIL

EUREKA REDEVELOPMENT AGENCY APN 002-241-007

CITY OF EUREKA PORTION OF 002-241-013

ESTUARINE AND MARINE WETLAND PER NWI

APPROX. TOP OF BANK

MHHW AT 7.13 FEET PER WETLAND DELINEATION

<E> DOCK

<E> 10.0' PAVED WATERFRONT TRAIL

10.0' PUBLIC ACCESS & PASSIVE RECREATIONAL EASEMENT PER 1762 O.R. 1420

20.00' STORM DRAIN EASEMENT PER 1999-18726-4

CCC WETLAND PER WETLAND DELINEATION REPORT BY SHN

<E> CONC SLAB

<E> STRUCTURE

<E> GRAVEL

20.00' EASEMENT PER 1751 O.R. 478

<E> GRAVEL

<N> 1150 SQ. FT. OFFICE/LAUNDRY BUILDING

CITY OF EUREKA PORTION OF 002-241-013

TIE TO <E> WATER METER
<E> WATER SERVICE LINE TO <E> RESTROOM TO BE ABANDONED

TIE TO <E> SEWER LATERAL
PROVIDE NEW CLEANOUT AT BACK OF WALK RAISED INTO CONCRETE COLLAR

SEE UTILITY NOTE 1

WATERFRONT DRIVE

CITY OF EUREKA APN 002-241-008

NORTHWESTERN PACIFIC RAILROAD CO. APN 002-055-002

NORTHWESTERN PACIFIC RAILROAD CO. APN 002-051-002

CITY OF EUREKA APN 002-241-015

THOMAS & PATRICIA WILWERDING APN 002-054-011

THOMAS & PATRICIA WILWERDING APN 002-054-009

CHARLES REBE AA APN 002-054

APN 002-054-008

0 20 40
SCALE IN FEET
NOTE: SCALE BARS DO NOT MEASURE FINISH PLANS ARE NOT TO SCALE

LOCATIONS AND ELEVATIONS SHOWN ARE PROVIDED FOR INFORMATION ONLY. SUCH INFORMATION MAY NOT BE COMPLETE OR ACCURATE. CONTRACTOR IS RESPONSIBLE FOR CONTACTING ALL AGENCIES INVOLVED AND VERIFYING LOCATIONS OF ALL UTILITIES THAT MAY BE IMPACTED BY HIS/HER WORK.

UTILITY PLAN
SCALE: 1" = 40'

UNAUTHORIZED CHANGES & USES: THE ENGINEER PREPARING THESE PLANS WILL NOT BE RESPONSIBLE FOR, OR LIABLE FOR, UNAUTHORIZED CHANGES TO OR USES OF THESE PLANS. ALL CHANGES TO THE PLANS MUST BE IN WRITING AND MUST BE APPROVED BY THE PREPARER OF THESE PLANS.

FOR PLAN REVIEW ONLY - NOT FOR CONSTRUCTION

PLANS CERTIFIED FOR CONSTRUCTION BY ENGINEER OF RECORD ON _____ SIGNATURE

REVISIONS	BY

PACIFIC AFFILIATES
CONSULTING ENGINEERS
900 W. WATERFRONT DRIVE · EUREKA, CA 95501
TEL (707) 445-3001 · FAX (707) 445-3003

REGISTERED PROFESSIONAL ENGINEER · CHRISTOPHER L SCHNEIDER · No. 17923 · EXP. 12-31-2020 · CIVIL · STATE OF CALIFORNIA

PRELIMINARY

UTILITY PLAN

PACIFIC AFFILIATES, INC. HEREBY EXPRESSLY RESERVES ITS COMMON LAW COPYRIGHT AND OTHER PROPERTY RIGHTS IN THESE PLANS. THESE PLANS AND DRAWINGS ARE NOT TO BE REPRODUCED, CHANGED OR COPIED IN ANY FORM OR MANNER WHATSOEVER, NOR ARE THEY TO BE ASSIGNED TO ANY THIRD PARTY, WITHOUT FIRST OBTAINING THE EXPRESS WRITTEN PERMISSION OF PACIFIC AFFILIATES, INC. IN ADDITION, THEY SHALL NOT BE REUSED BY THE OWNER OR ANY THIRD PARTY, WITHOUT FIRST OBTAINING WRITTEN PERMISSION AND CONSENT

CITY OF EUREKA
WATERFRONT DRIVE
EUREKA, CA 95501
APN 002-241-013

Date: DECEMBER 4, 2020
Scale: AS NOTED
Drawn by: NM

SHEET NUMBER C-5

JOB NUMBER 20-2334

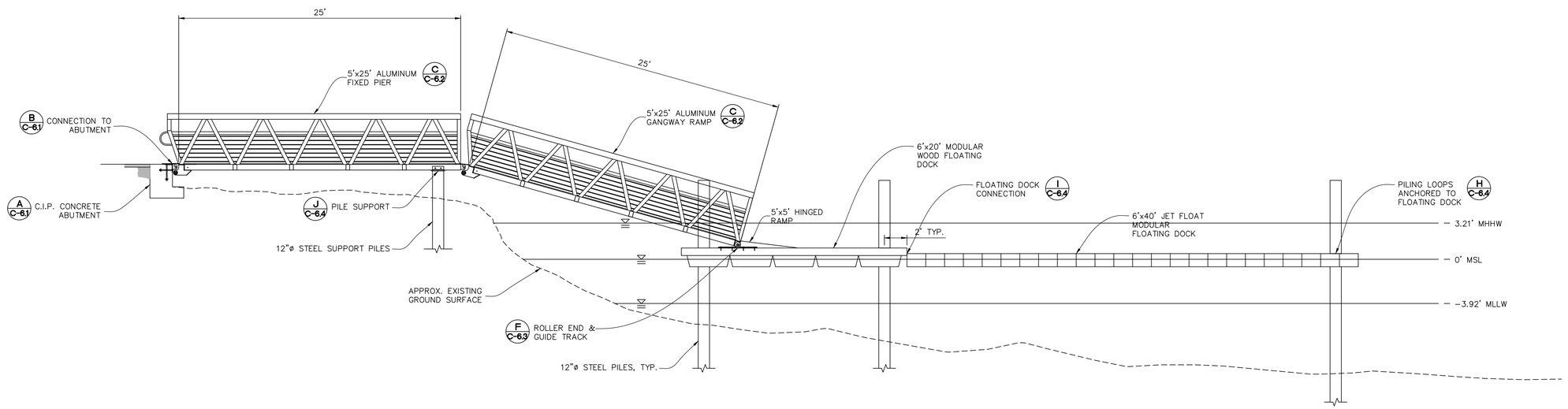

A RAMP - ELEVATION
SCALE: 1"=5'

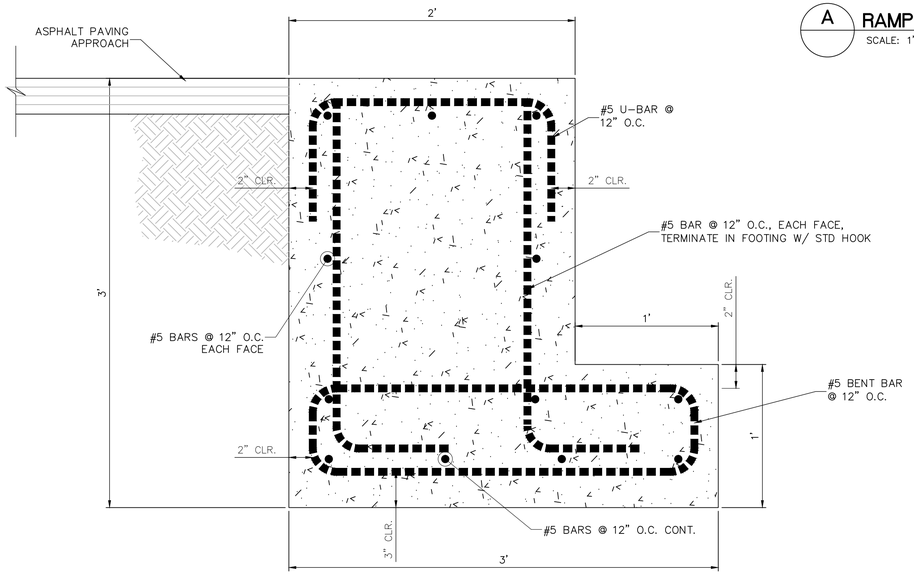

A ABUTMENT SECTION
SCALE: N.T.S.

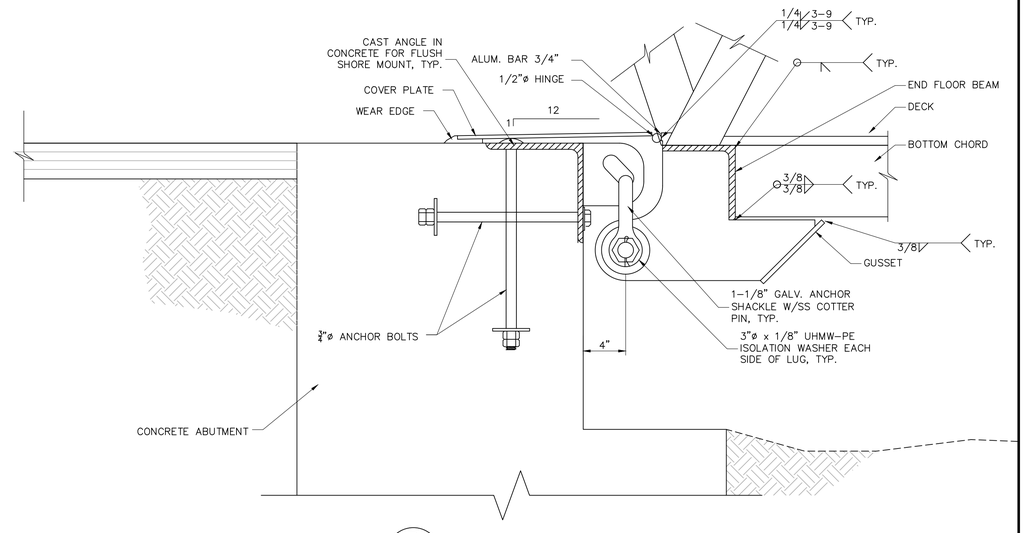

B CONNECTION TO ABUTMENT
SCALE: N.T.S.

LOCATIONS AND ELEVATIONS SHOWN ARE PROVIDED FOR INFORMATION ONLY. SUCH INFORMATION MAY NOT BE COMPLETE OR ACCURATE. CONTRACTOR IS RESPONSIBLE FOR CONTACTING ALL AGENCIES INVOLVED AND VERIFYING LOCATIONS OF ALL UTILITIES THAT MAY BE IMPACTED BY HIS/HER WORK.

UNAUTHORIZED CHANGES & USES: THE ENGINEER PREPARING THESE PLANS WILL NOT BE RESPONSIBLE FOR, OR LIABLE FOR, UNAUTHORIZED CHANGES TO OR USES OF THESE PLANS. ALL CHANGES TO THE PLANS MUST BE IN WRITING AND MUST BE APPROVED BY THE PREPARER OF THESE PLANS.

FOR PLAN REVIEW ONLY - NOT FOR CONSTRUCTION
PLANS CERTIFIED FOR CONSTRUCTION BY ENGINEER OF RECORD ON _____ SIGNATURE

REVISIONS	BY

PACIFIC AFFILIATES
CONSULTING ENGINEERS
900 W. WATERFRONT DRIVE · EUREKA, CA 95501
TEL (707) 445-3001 • FAX (707) 445-3003

REGISTERED PROFESSIONAL ENGINEER FRED L SCHNEIDER EXP. 12-31-2020 CIVIL STATE OF CALIFORNIA
PRELIMINARY

RAMP ELEVATION

PACIFIC AFFILIATES, INC. HEREBY EXPRESSLY RESERVES ITS COMMON LAW COPYRIGHT AND OTHER PROPERTY RIGHTS IN THESE PLANS AND DRAWINGS. THESE PLANS AND DRAWINGS ARE NOT TO BE REPRODUCED, CHANGED OR COPIED IN ANY FORM OR MANNER WHATSOEVER, NOR ARE THEY TO BE ASSIGNED TO ANY THIRD PARTY, WITHOUT FIRST OBTAINING THE EXPRESS WRITTEN PERMISSION OF PACIFIC AFFILIATES, INC. IN THE EVENT OF UNAUTHORIZED REUSE BY THE CLIENT OR ANY THIRD PARTY, THE CLIENT AGREES TO INDEMNIFY AND HOLD HARMLESS PACIFIC AFFILIATES, INC. AND ITS OFFICERS AND EMPLOYEES WITH RESPECT TO ANY LOSS, EXPENSE, LIABILITY, DAMAGE OR CLAIM ARISING OUT OF SUCH REUSE. THE CLIENT FURTHER AGREES TO DEFEND, AT ITS OWN EXPENSE, AND ON BEHALF OF PACIFIC AFFILIATES, INC. AND ITS OFFICERS AND EMPLOYEES, ANY ACTION BROUGHT AGAINST ANY OF THEM ARISING OUT OF SUCH REUSE BY THE CLIENT OR ANY THIRD PARTY WITHOUT FIRST OBTAINING WRITTEN PERMISSION AND CONSENT.

CITY OF EUREKA
WATERFRONT DRIVE
EUREKA, CA 95501
APN 002-241-013

Date: DECEMBER 4, 2020
Scale: AS NOTED
Drawn by: NM

SHEET NUMBER
C-6.1

JOB NUMBER
20-2334

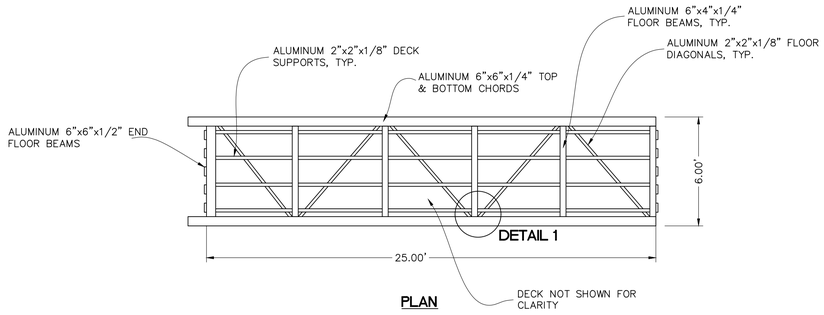

PLAN

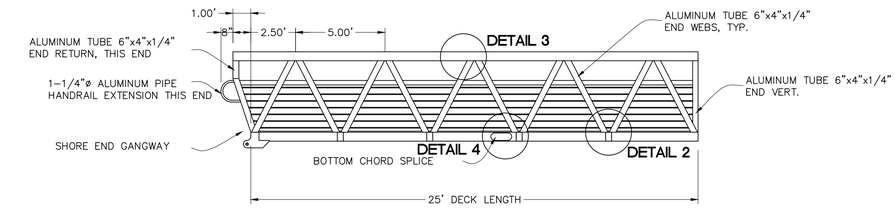

ELEVATION

C 5'x25' GANGWAY RAMP

SCALE: 1"=4'

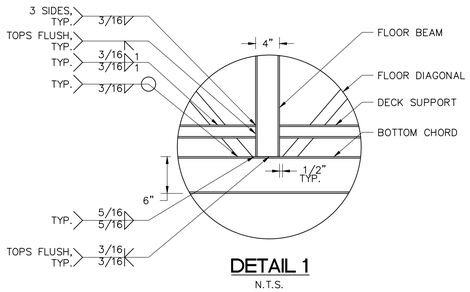

DETAIL 1
N.T.S.

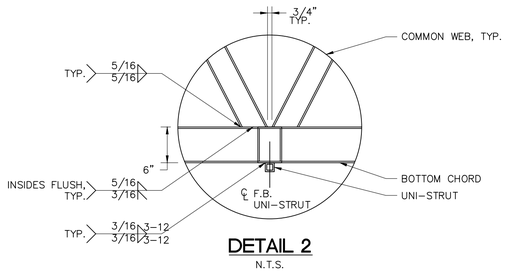

DETAIL 2
N.T.S.

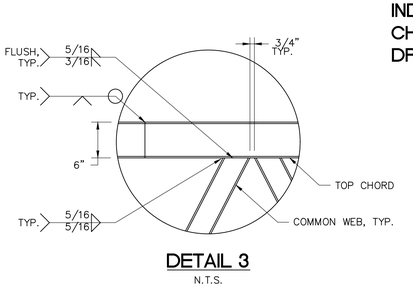

DETAIL 3
N.T.S.

NOTE: ALL GANGWAY RAMP DETAILS ARE PER MANTLE INDUSTRIES, INC. SUBJECT TO CHANGE UPON FINAL SHOP DRAWING APPROVAL

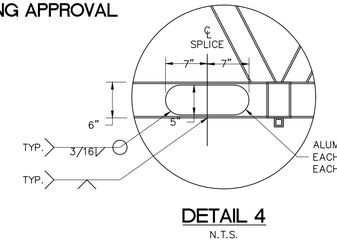

DETAIL 4
N.T.S.

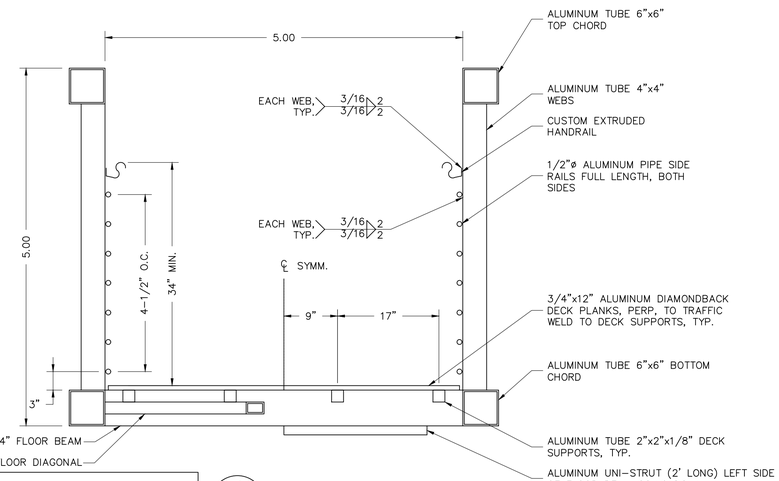

D SECTION

SCALE: 1"=1'

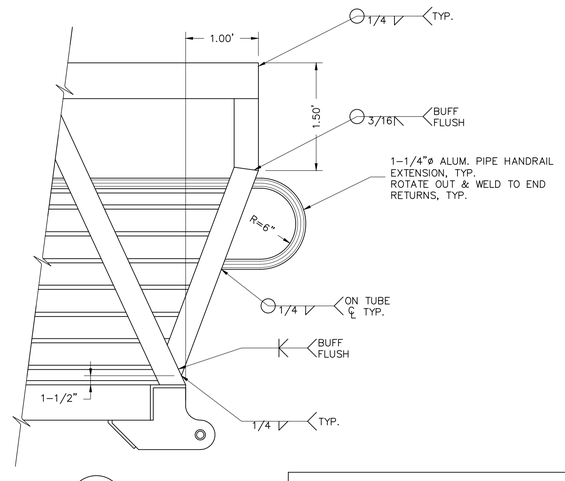

E SHORE END

SCALE: 1"=1'

LOCATIONS AND ELEVATIONS SHOWN ARE PROVIDED FOR INFORMATION ONLY. SUCH INFORMATION MAY NOT BE COMPLETE OR ACCURATE. CONTRACTOR IS RESPONSIBLE FOR CONTACTING ALL AGENCIES INVOLVED AND VERIFYING LOCATIONS OF ALL UTILITIES THAT MAY BE IMPACTED BY HIS/HER WORK.

UNAUTHORIZED CHANGES & USES: THE ENGINEER PREPARING THESE PLANS WILL NOT BE RESPONSIBLE FOR, OR LIABLE FOR, UNAUTHORIZED CHANGES TO OR USES OF THESE PLANS. ALL CHANGES TO THE PLANS MUST BE IN WRITING AND MUST BE APPROVED BY THE PREPARER OF THESE PLANS.

FOR PLAN REVIEW ONLY - NOT FOR CONSTRUCTION

PLANS CERTIFIED FOR CONSTRUCTION BY ENGINEER OF RECORD ON _____ SIGNATURE _____

REVISIONS	BY

PACIFIC AFFILIATES
CONSULTING ENGINEERS
900 W. WATERFRONT DRIVE, EUREKA, CA 95501
TEL (707) 445-3001 • FAX (707) 445-3003

REGISTERED PROFESSIONAL ENGINEER L. SCHNEIDER EXP. 12-31-2020 CIVIL STATE OF CALIFORNIA

PRELIMINARY

GANGWAY RAMP DETAILS

PACIFIC AFFILIATES, INC. HEREBY EXPRESSLY RESERVES ITS COMMON LAW COPYRIGHT AND OTHER PROPERTY RIGHTS IN THESE PLANS. THESE PLANS AND DRAWINGS ARE NOT TO BE REPRODUCED, CHANGED OR COPIED IN ANY FORM OR MANNER WHATSOEVER, NOR ARE THEY TO BE ASSIGNED TO ANY THIRD PARTY, WITHOUT FIRST OBTAINING THE EXPRESS WRITTEN PERMISSION OF PACIFIC AFFILIATES, INC. IN THE EVENT OF UNAUTHORIZED REUSE BY THE OWNER OR BY ANY THIRD PARTY, WITHOUT FIRST OBTAINING WRITTEN PERMISSION AND CONSENT

CITY OF EUREKA
WATERFRONT DRIVE
EUREKA, CA 95501
APN 002-241-013

Date: DECEMBER 4, 2020
Scale: AS NOTED
Drawn by: NM

SHEET NUMBER C-6.2

JOB NUMBER 20-2334

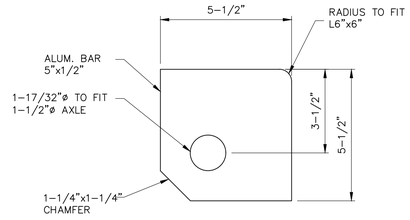

ROLLER TAB
N.T.S.

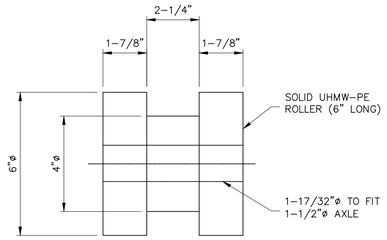

ROLLER
N.T.S.

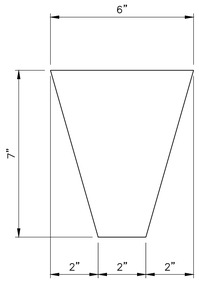

GUSSET
N.T.S.

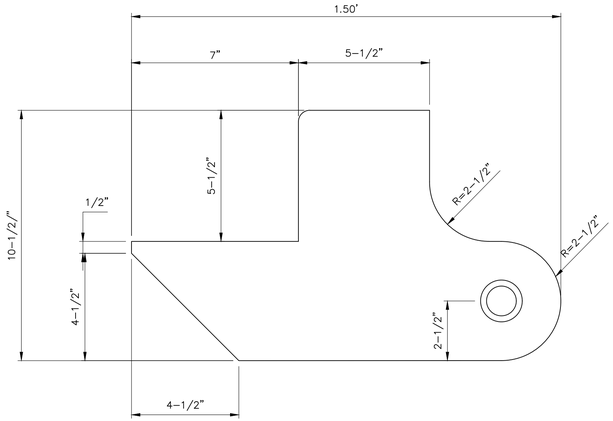

LUG
N.T.S.

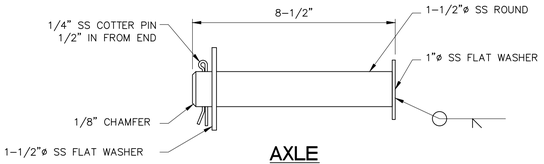

AXLE
N.T.S.

NOTE: ALL GANGWAY RAMP DETAILS ARE PER MANTLE INDUSTRIES, INC. SUBJECT TO CHANGE UPON FINAL SHOP DRAWING APPROVAL

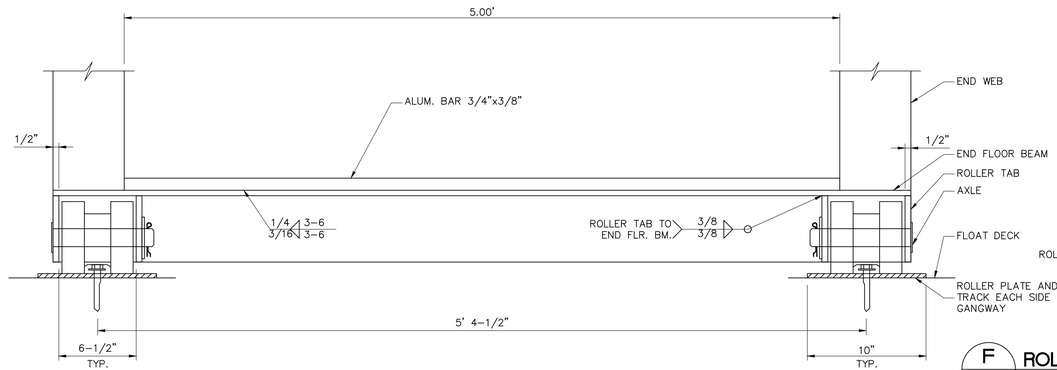

F ROLLER END
N.T.S.

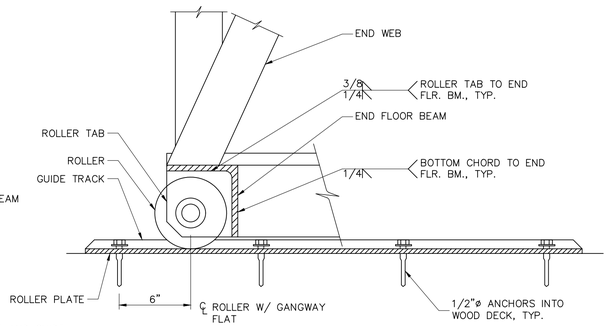

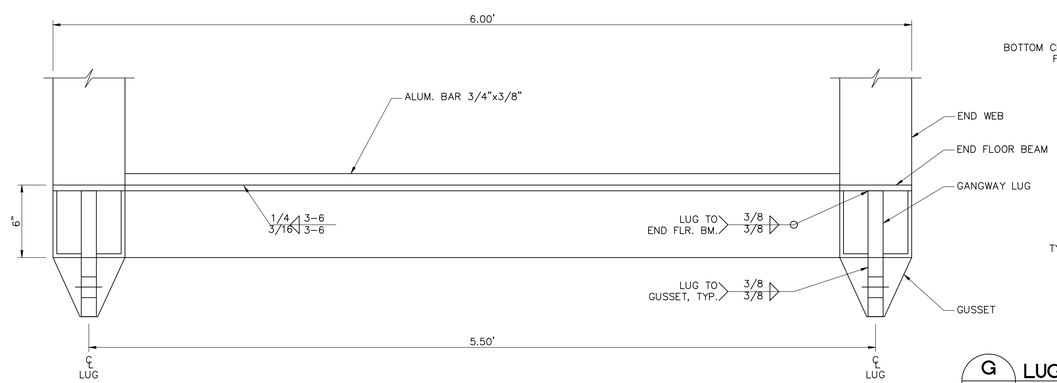

G LUG END
N.T.S.

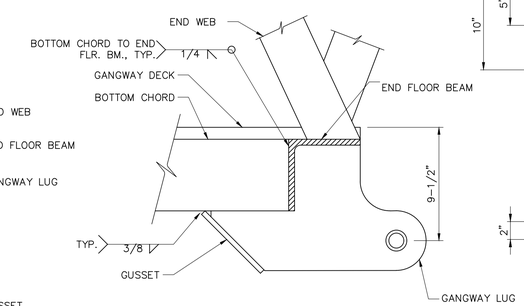

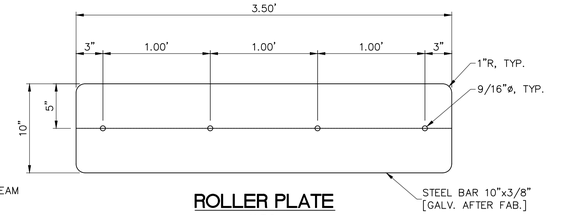

ROLLER PLATE
N.T.S.

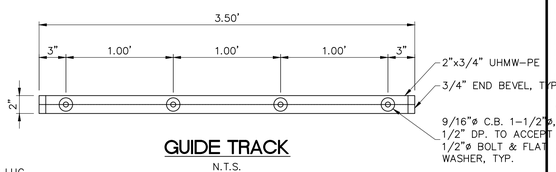

GUIDE TRACK
N.T.S.

LOCATIONS AND ELEVATIONS SHOWN ARE PROVIDED FOR INFORMATION ONLY. SUCH INFORMATION MAY NOT BE COMPLETE OR ACCURATE. CONTRACTOR IS RESPONSIBLE FOR CONTACTING ALL AGENCIES INVOLVED AND VERIFYING LOCATIONS OF ALL UTILITIES THAT MAY BE IMPACTED BY HIS/HER WORK.

UNAUTHORIZED CHANGES & USES: THE ENGINEER PREPARING THESE PLANS WILL NOT BE RESPONSIBLE FOR, OR LIABLE FOR, UNAUTHORIZED CHANGES TO OR USES OF THESE PLANS. ALL CHANGES TO THE PLANS MUST BE IN WRITING AND MUST BE APPROVED BY THE PREPARER OF THESE PLANS.

FOR PLAN REVIEW ONLY - NOT FOR CONSTRUCTION

PLANS CERTIFIED FOR CONSTRUCTION BY ENGINEER OF RECORD ON _____ SIGNATURE

REVISIONS	BY

PACIFIC AFFILIATES
CONSULTING ENGINEERS
900 W. WATERFRONT DRIVE · EUREKA, CA 95501
TEL (707) 445-3001 • FAX (707) 445-3003

REGISTERED PROFESSIONAL ENGINEER L. SCHNEIDER No. C 073203 EXP. 12/31/2020 STATE OF CALIFORNIA CIVIL
PRELIMINARY

GANGWAY RAMP DETAILS

PACIFIC AFFILIATES, INC. HEREBY EXPRESSLY RESERVES ITS COMMON LAW COPYRIGHT AND OTHER PROPERTY RIGHTS IN THESE PLANS. THESE PLANS AND DRAWINGS ARE NOT TO BE REPRODUCED, CHANGED OR COPIED IN ANY FORM OR MANNER WHATSOEVER, NOR ARE THEY TO BE ASSIGNED TO ANY THIRD PARTY, WITHOUT FIRST OBTAINING THE EXPRESS WRITTEN PERMISSION OF PACIFIC AFFILIATES, INC. IN THE EVENT OF UNAUTHORIZED REUSE BY OTHERS OR TRANSFER TO ANY THIRD PARTY WITHOUT FIRST OBTAINING WRITTEN PERMISSION AND CONSENT

CITY OF EUREKA
WATERFRONT DRIVE
EUREKA, CA 95501
APN 002-241-013

Date: DECEMBER 4, 2020
Scale: AS NOTED
Drawn by: NM

SHEET NUMBER C-6.3

JOB NUMBER 20-2334

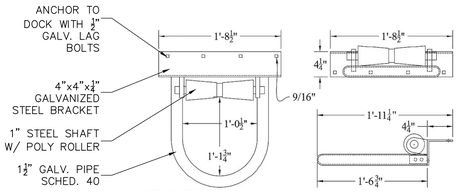

H **HOOP PILE GUIDE**
SCALE: N.T.S.

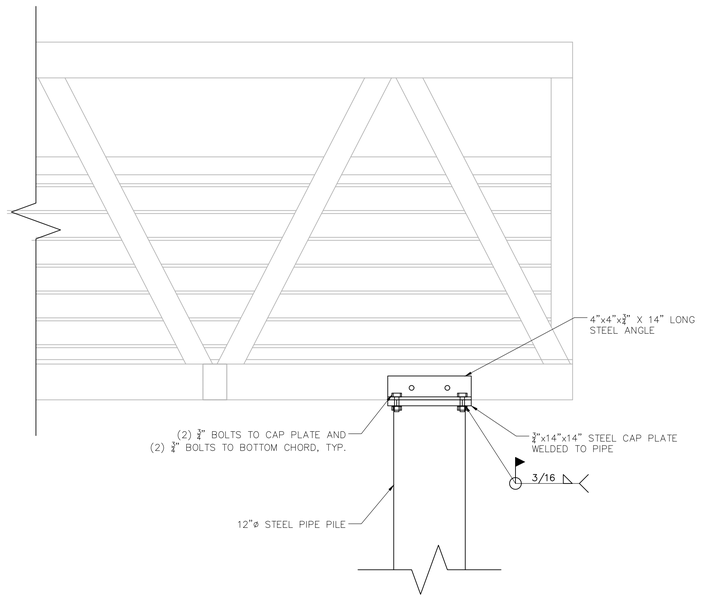

ELEVATION

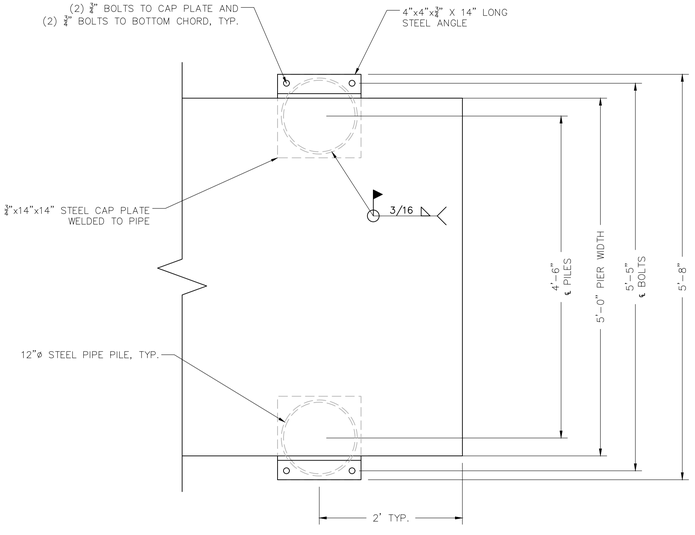

PLAN

J **PILE TO PIER CONNECTION**
SCALE: N.T.S.

LOCATIONS AND ELEVATIONS SHOWN ARE PROVIDED FOR INFORMATION ONLY. SUCH INFORMATION MAY NOT BE COMPLETE OR ACCURATE. CONTRACTOR IS RESPONSIBLE FOR CONTACTING ALL AGENCIES INVOLVED AND VERIFYING LOCATIONS OF ALL UTILITIES THAT MAY BE IMPACTED BY HIS/HER WORK.

UNAUTHORIZED CHANGES & USES: THE ENGINEER PREPARING THESE PLANS WILL NOT BE RESPONSIBLE FOR, OR LIABLE FOR, UNAUTHORIZED CHANGES TO OR USES OF THESE PLANS. ALL CHANGES TO THE PLANS MUST BE IN WRITING AND MUST BE APPROVED BY THE PREPARER OF THESE PLANS.

FOR PLAN REVIEW ONLY - NOT FOR CONSTRUCTION

PLANS CERTIFIED FOR CONSTRUCTION BY ENGINEER OF RECORD ON _____ SIGNATURE

REVISIONS	BY

PACIFIC AFFILIATES
CONSULTING ENGINEERS
900 W. WATERFRONT DRIVE · EUREKA, CA 95501
TEL (707) 445-3001 • FAX (707) 445-3003

REGISTERED PROFESSIONAL ENGINEER
PRELIMINARY
CHRISTOPHER L SCHNEIDER
No. C 78203
EXP. 12-31-2020
STATE OF CALIFORNIA
CIVIL

GANGWAY RAMP DETAILS

PACIFIC AFFILIATES, INC. HEREBY EXPRESSLY RESERVES ITS COMMON LAW COPYRIGHT AND OTHER PROPERTY RIGHTS IN THESE PLANS. THESE PLANS AND DRAWINGS ARE NOT TO BE REPRODUCED, CHANGED OR COPIED IN ANY FORM OR MANNER WHATSOEVER, NOR ARE THEY TO BE ASSIGNED TO ANY THIRD PARTY, WITHOUT FIRST OBTAINING THE EXPRESS WRITTEN PERMISSION OF PACIFIC AFFILIATES, INC. IN THE EVENT OF UNAUTHORIZED REUSE BY ANY PARTY WITHOUT PRIOR OBTAINING WRITTEN PERMISSION AND CONSENT.

CITY OF EUREKA
WATERFRONT DRIVE
EUREKA, CA 95501
APN 002-241-013

Date: DECEMBER 4, 2020
Scale: AS NOTED
Drawn by: NM

SHEET NUMBER
C-6.4

JOB NUMBER
20-2334

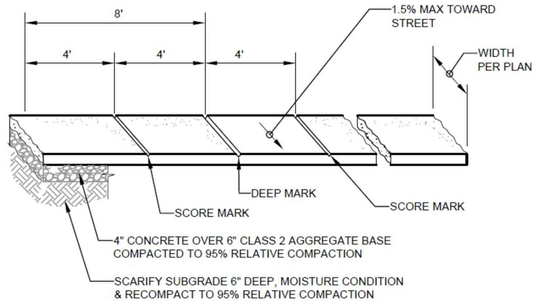

NOTES:
1. DEEP SCORE MARK OR WEAKENED PLANE-DEPTH EQUAL TO 1/5 OF SLAB THICKNESS.
2. SIDEWALK SHALL BE BROOM FINISHED. DIRECTION OF BROOMING SHALL BE PERPENDICULAR TO DIRECTION OF TRAVEL.
3. CONTRACTOR TO DRILL AND DOWEL #4'S AT 24" O.C. 6" INTO EXISTING SIDEWALK AT JUNCTIONS TO EXISTING SIDEWALK, AND BACK OF CURBS AS POSSIBLE.

A TYPICAL SIDEWALK
SCALE: N.T.S.

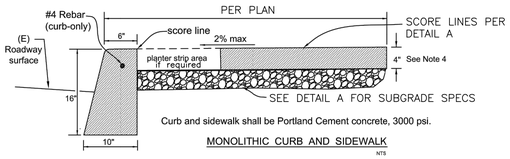

Curb and sidewalk shall be Portland Cement concrete, 3000 psi.

MONOLITHIC CURB AND SIDEWALK
NTS

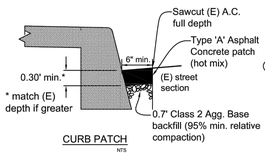

CURB PATCH
NTS

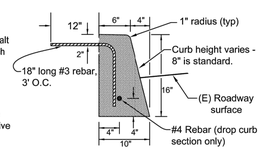

CONCRETE CURB NON-MONOLITHIC
NTS

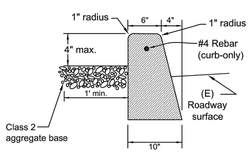

CONCRETE CURB-ONLY
NTS

NOTES:
1. Refer to City Resolution No. 6219 for additional information regarding concrete curb and sidewalk specifications.
2. All existing sidewalk areas being replaced shall be sawcut along and replaced to the nearest scoreline. Thoroughly tack coat all vertical surfaces prior to paving with AC.
3. Forms shall extend the full depth of the face of curb.
4. Sidewalk constructed within the radius of street intersections shall have a minimum thickness of 6" and be finished to appropriate ADA standards.
5. Weakened plane joints shall be installed in all sidewalks and curbs at intervals between 10' and 15', at the extension of property lines at street intersections, at both ends of all drop curb entrances, and at the property line where concrete is continuous across the property line. Weakened plane joints shall be installed in the curbs continously with the weakened plane joints in the adjacent sidewalk.

CITY OF EUREKA STD DETAIL: R-20
B CURB AND SIDEWALK
SCALE: N.T.S.

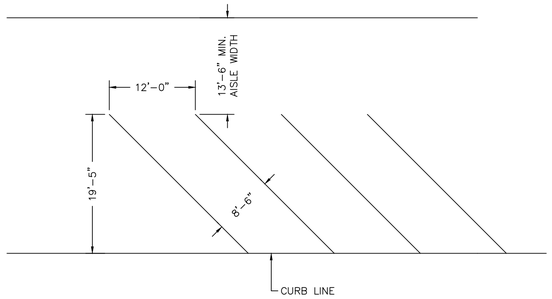

C 45 DEGREE PARKING DETAIL
NOT TO SCALE

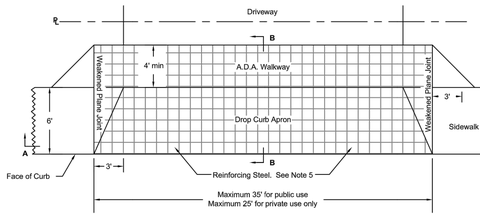

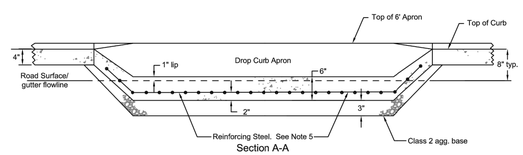

Section A-A

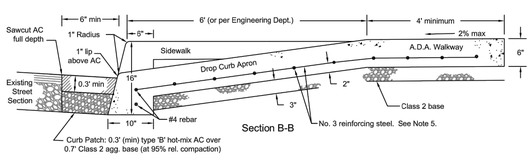

Section B-B

Notes:
1. See Concrete Curb and Sidewalk detail drawing for details.
2. Refer to City Resolution No. 6219 for additional information regarding concrete curb and sidewalk specifications.
3. All existing sidewalk areas being replaced shall be sawcut along and replaced to the nearest scoreline.
4. Where (N) sidewalk or driveway meets the (E) sidewalk or driveway, the (E) sidewalk or driveway shall have No. 3 rebar doweled and epoxied into it (minimum embedment length = 3") at 3' O.C. with a minimum of 12" rebar exposed.
5. Reinforcing steel for commercial driveway shall be either No. 3 rebar at 12" E.W. or 6" x 6" No. 10 welded wire mesh.

CITY OF EUREKA STD DETAIL: R-31
D DRIVEWAY APPROACH
SCALE: N.T.S.

LOCATIONS AND ELEVATIONS SHOWN ARE PROVIDED FOR INFORMATION ONLY. SUCH INFORMATION MAY NOT BE COMPLETE OR ACCURATE. CONTRACTOR IS RESPONSIBLE FOR CONTACTING ALL AGENCIES INVOLVED AND VERIFYING LOCATIONS OF ALL UTILITIES THAT MAY BE IMPACTED BY HIS/HER WORK.

UNAUTHORIZED CHANGES & USES: THE ENGINEER PREPARING THESE PLANS WILL NOT BE RESPONSIBLE FOR, OR LIABLE FOR, UNAUTHORIZED CHANGES TO OR USES OF THESE PLANS. ALL CHANGES TO THE PLANS MUST BE IN WRITING AND MUST BE APPROVED BY THE PREPARER OF THESE PLANS.

FOR PLAN REVIEW ONLY - NOT FOR CONSTRUCTION
PLANS CERTIFIED FOR CONSTRUCTION BY ENGINEER OF RECORD ON _____ SIGNATURE

REVISIONS	BY

PACIFIC AFFILIATES
CONSULTING ENGINEERS
900 W. WATERFRONT DRIVE · EUREKA, CA 95501
TEL (707) 445-3001 • FAX (707) 445-3003

REGISTERED PROFESSIONAL ENGINEER · MICHAEL L. SCHNEIDER · No. 17923 · EXP. 12-31-2020 · CIVIL · STATE OF CALIFORNIA
PRELIMINARY

DETAILS

PACIFIC AFFILIATES, INC. HEREBY EXPRESSLY RESERVES ITS COMMON LAW COPYRIGHT AND OTHER PROPERTY RIGHTS IN THESE PLANS. THESE PLANS AND DRAWINGS ARE NOT TO BE REPRODUCED, CHANGED OR COPIED IN ANY FORM OR MANNER WHATSOEVER, NOR ARE THEY TO BE ASSIGNED TO ANY THIRD PARTY, WITHOUT FIRST OBTAINING THE EXPRESS WRITTEN PERMISSION OF PACIFIC AFFILIATES, INC. IN THE EVENT OF UNAUTHORIZED REUSE BY THE OWNER OR BY ANY THIRD PARTY, THE OWNER AND THIRD PARTY AGREE TO HOLD HARMLESS AND INDEMNIFY PACIFIC AFFILIATES, INC. AND ITS OFFICERS AND EMPLOYEES FROM ANY AND ALL LIABILITY, REGARDLESS OF HOW SUCH LIABILITY ARISES, INCLUDING ATTORNEY'S FEES AND COSTS. THE OWNER AND THIRD PARTY AGREE THAT THE AMOUNT OF DAMAGES FOR WHICH THEY ARE LIABLE SHALL BE NOT LESS THAN $10,000. BY USING THESE PLANS FOR ANY PURPOSE WHATSOEVER, THE OWNER AND THIRD PARTY AGREE TO BE BOUND BY THE FOREGOING PROVISIONS. IF THE OWNER OR THIRD PARTY DOES NOT AGREE TO BE BOUND BY THE FOREGOING PROVISIONS, THEY SHALL NOT USE THESE PLANS FOR ANY PURPOSE WHATSOEVER AND SHALL IMMEDIATELY RETURN THEM TO PACIFIC AFFILIATES, INC.

CITY OF EUREKA
WATERFRONT DRIVE
EUREKA, CA 95501
APN 002-241-013

Date: DECEMBER 4, 2020
Scale: AS NOTED
Drawn by: NM

SHEET NUMBER
C-7.1

JOB NUMBER
20-2334

ACCESSIBLE ROUTE OF TRAVEL TO BE:
1) CONTINUOUSLY ACCESSIBLE,
2) HAVE MAXIMUM 1/2" CHANGES IN ELEVATION,
3) MINIMUM 48" IN WIDTH,
4) HAVE MAXIMUM 1/4" PER FOOT CROSS SLOPES,
5) WHERE NECESSARY TO CHANGE ELEVATION AT A SLOPE EXCEEDING 5% SHALL HAVE RAMPS COMPLYING WITH SECTION 1133B.5.

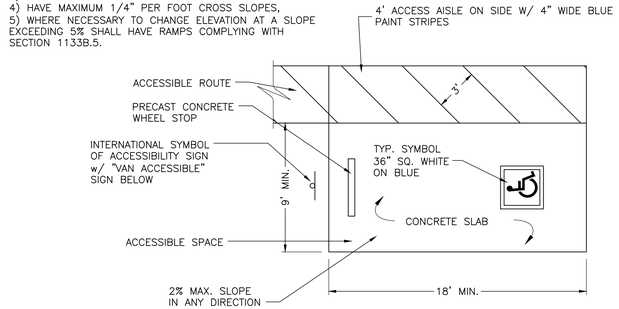

SINGLE PARKING STALL

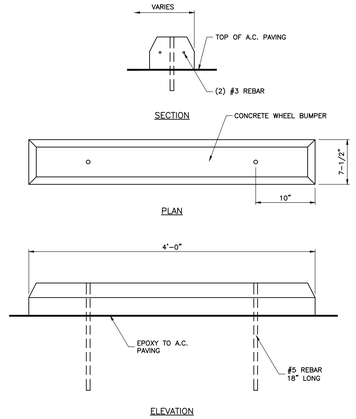

B WHEEL BUMPER DETAIL
NOT TO SCALE

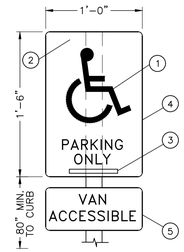

1. WHITE
2. BLUE
3. ORDINANCE NO. VERIFY WITH CITY.
4. 70 SQ. IN. MIN. SIGN AREA
5. 12" x 8"

NOTE: SIGNS TO BE PERMANENTLY POSTED AND REFLECTORIZED

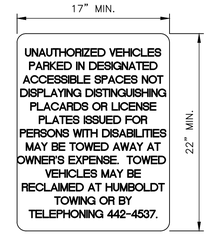

NOTES
1. SIGN SHALL BE POSTED IN A CONSPICUOUS PLACE AT EACH ENTRANCE TO OFF-STREET PARKING FACILITIES, OR IMMEDIATELY ADJACENT TO AND VISIBLE FROM EACH STALL OR SPACE.
2. LETTERS SHALL NOT BE LESS THAN 1 INCH IN HEIGHT.

C ACCESSIBLE SIGNAGE
NOT TO SCALE

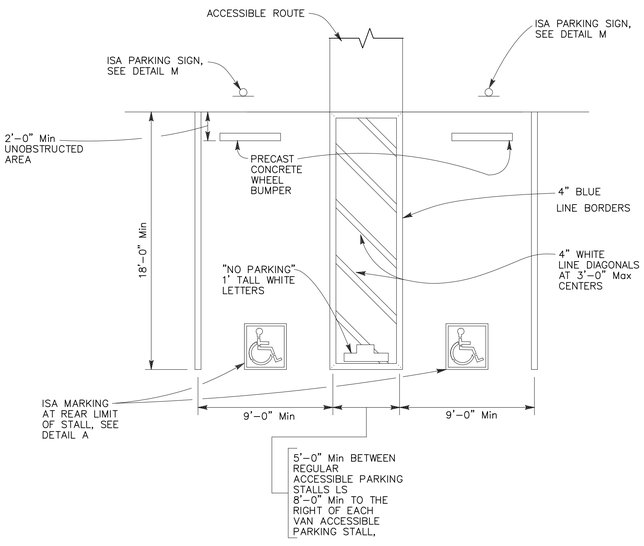

DOUBLE PARKING STALL

A ACCESSIBLE STALL
NOT TO SCALE

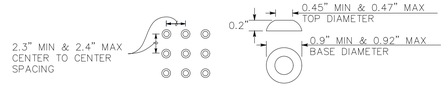

RAISED TRUNCATED DOME PATTERN (IN-LINE)

NOTE:
CURB RAMPS SHALL HAVE A DETECTABLE WARNING SURFACE THAT EXTENDS THE FULL WIDTH AND 3'-0" DEPTH OF THE RAMP. A 4'-0" WIDE DETECTABLE WARNING SURFACE MAY BE USED ON A 4'-2" WIDE CURB RAMP. DETECTABLE WARNING SURFACES SHALL CONFORM TO THE REQUIREMENTS IN THE CBC.

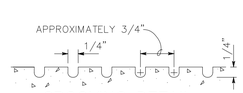

GROOVING DETAIL

D DETECTABLE WARNING SURFACE
NOT TO SCALE

LOCATIONS AND ELEVATIONS SHOWN ARE PROVIDED FOR INFORMATION ONLY. SUCH INFORMATION MAY NOT BE COMPLETE OR ACCURATE. CONTRACTOR IS RESPONSIBLE FOR CONTACTING ALL AGENCIES INVOLVED AND VERIFYING LOCATIONS OF ALL UTILITIES THAT MAY BE IMPACTED BY HIS/HER WORK.

UNAUTHORIZED CHANGES & USES: THE ENGINEER PREPARING THESE PLANS WILL NOT BE RESPONSIBLE FOR, OR LIABLE FOR, UNAUTHORIZED CHANGES TO OR USES OF THESE PLANS. ALL CHANGES TO THE PLANS MUST BE IN WRITING AND MUST BE APPROVED BY THE PREPARER OF THESE PLANS.

FOR PLAN REVIEW ONLY - NOT FOR CONSTRUCTION
PLANS CERTIFIED FOR CONSTRUCTION BY ENGINEER OF RECORD ON _____ SIGNATURE

REVISIONS	BY

PACIFIC AFFILIATES
CONSULTING ENGINEERS
930 W. WATERFRONT DRIVE, EUREKA, CA 95501
TEL (707) 445-3001 • FAX (707) 445-3003

REGISTERED PROFESSIONAL ENGINEER L SCHNEIDER EXP. 12-31-2020 STATE OF CALIFORNIA CIVIL
PRELIMINARY

DETAILS

PACIFIC AFFILIATES, INC. HEREBY EXPRESSLY RESERVES ITS COMMON LAW COPYRIGHT AND OTHER PROPERTY RIGHTS IN THESE PLANS. THESE PLANS AND DRAWINGS ARE NOT TO BE REPRODUCED, CHANGED OR COPIED IN ANY FORM OR MANNER WHATSOEVER, NOR ARE THEY TO BE ASSIGNED TO ANY THIRD PARTY, WITHOUT FIRST OBTAINING THE EXPRESS WRITTEN PERMISSION OF PACIFIC AFFILIATES, INC. IN THE EVENT OF UNAUTHORIZED REUSE BY THE CLIENT OR ANY THIRD PARTY, WITHOUT FIRST OBTAINING WRITTEN PERMISSION AND CONSENT

CITY OF EUREKA
WATERFRONT DRIVE
EUREKA, CA 95501
APN 002-241-013

Date: DECEMBER 4, 2020
Scale: AS NOTED
Drawn by: NM

SHEET NUMBER
C-7.2

JOB NUMBER
20-2334

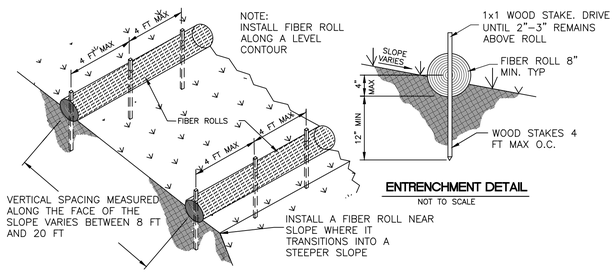

A TYPICAL FIBER ROLL INSTALLATION

N.T.S.

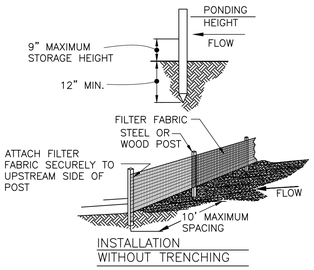

B SILT FENCE INSTALLATION

N.T.S.

NOTES:

1. MUST BE INSTALLED PROPERLY TO AVOID NOTICE OF VIOLATION. REFER TO COUNTY STANDARDS DWG. 3.
2. SILT FENCE SHALL BE PLACED ON SLOPE CONTOURS TO MAXIMIZE PONDING EFFICIENCY.
3. INSPECT AND REPAIR FENCE AFTER EACH STORM EVENT AND REMOVE SEDIMENT WHEN NECESSARY. 9" MAXIMUM RECOMMENDED STORAGE HEIGHT.
4. REMOVED SEDIMENT SHALL BE DEPOSITED TO AN AREA THAT WILL NOT CONTRIBUTE TO SEDIMENT OFF-SITE AND CAN BE PERMANENTLY STABILIZED.
5. IF EROSION AND SEDIMENT CONTROL MEASURES FAIL TO PERFORM AS EXPECTED,THE ENGINEER IS TO BE CONTACTED IMMEDIATELY.

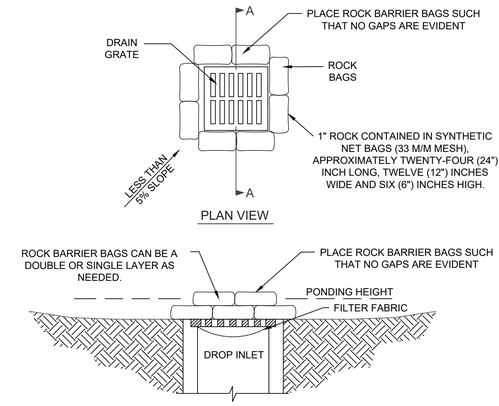

C DROP INLET PROTECTION

SCALE: AS NOTED

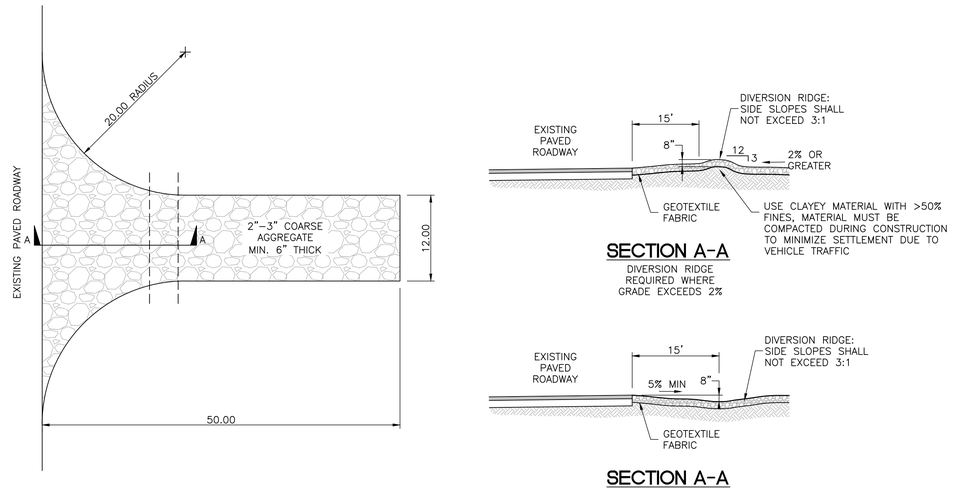

D STABILIZED CONSTRUCTION EXIT

SCALE: AS NOTED

LOCATIONS AND ELEVATIONS SHOWN ARE PROVIDED FOR INFORMATION ONLY. SUCH INFORMATION MAY NOT BE COMPLETE OR ACCURATE. CONTRACTOR IS RESPONSIBLE FOR CONTACTING ALL AGENCIES INVOLVED AND VERIFYING LOCATIONS OF ALL UTILITIES THAT MAY BE IMPACTED BY HIS/HER WORK.

UNAUTHORIZED CHANGES & USES: THE ENGINEER PREPARING THESE PLANS WILL NOT BE RESPONSIBLE FOR, OR LIABLE FOR, UNAUTHORIZED CHANGES TO OR USES OF THESE PLANS. ALL CHANGES TO THE PLANS MUST BE IN WRITING AND MUST BE APPROVED BY THE PREPARER OF THESE PLANS.

FOR PLAN REVIEW ONLY - NOT FOR CONSTRUCTION

PLANS CERTIFIED FOR CONSTRUCTION BY ENGINEER OF RECORD ON _____ SIGNATURE

REVISIONS	BY

PACIFIC AFFILIATES
CONSULTING ENGINEERS
900 W. WATERFRONT DRIVE · EUREKA, CA 95501
TEL (707) 445-3001 • FAX (707) 445-3003

REGISTERED PROFESSIONAL ENGINEER
L SCHNEIDER
No. 23123
EXP. 12/31/2020
STATE OF CALIFORNIA
CIVIL
PRELIMINARY

DETAILS

PACIFIC AFFILIATES, INC. HEREBY EXPRESSLY RESERVES ITS COMMON LAW COPYRIGHT AND OTHER PROPERTY RIGHTS IN THESE PLANS. THESE PLANS AND DRAWINGS ARE NOT TO BE REPRODUCED, CHANGED OR COPIED IN ANY FORM OR MANNER WHATSOEVER, NOR ARE THEY TO BE ASSIGNED TO ANY THIRD PARTY, WITHOUT FIRST OBTAINING THE EXPRESS WRITTEN PERMISSION OF PACIFIC AFFILIATES. ALL RIGHTS OF PACIFIC AFFILIATES IN THE PLANS AND DRAWINGS WHETHER UNDER EXISTING OR FUTURE COPYRIGHT LAW, SHALL BE PRESERVED FOR THE BENEFIT OF PACIFIC AFFILIATES, AND ANY USE OF THESE PLANS AND DRAWINGS BY ANY THIRD PARTY, WITHOUT FIRST OBTAINING WRITTEN PERMISSION AND CONSENT FROM PACIFIC AFFILIATES, INC. SHALL BE AT THE RISK OF SUCH THIRD PARTY.

CITY OF EUREKA
WATERFRONT DRIVE
EUREKA, CA 95501
APN 002-241-013

Date: DECEMBER 4, 2020
Scale: AS NOTED
Drawn by: NM

SHEET NUMBER
C-7.3

JOB NUMBER
20-2334

NOTES:

1. THE SEWER SERVICE LATERAL SHALL BE OF SUFFICIENT DEPTH TO ADEQUATELY SERVE THE BUILDING SITE, AND IN NO CASE SHALL BE LESS THAN 3 FT. IN DEPTH AT THE BACK OF THE P.U.E. UNLESS OTHERWISE AUTHORIZED BY THE DISTRICT.
2. WHERE PROBLEMS ARE ANTICIPATED IN PROVIDING SEWER SERVICE TO A GIVEN BUILDING SITE, THE LATERAL INVERT AT THE BACK OF THE P.U.E. SHALL BE STAKED BY THE OWNER'S ENGINEER.
3. WHERE SERVICE LATERAL IS LOCATED IN DRIVEWAY APPROACH, THE CLEANOUT IS TO BE LOCATED 18" BEHIND APRON.
4. MINIMUM 2% EXCEPT WHERE A VARIATION IS SPECIFICALLY APPROVED BY THE DISTRICT.

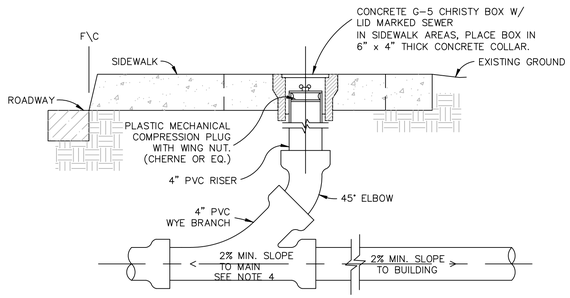

A GRAVITY SEWER CLEANOUT

NOT TO SCALE

NEW SEWER UNDER NEW OR EXISTING WATER

CASE 1

NEW SEWER OVER NEW OR EXISTING WATER

CASE 2

NEW WATER OVER EXISTING SEWER

CASE 3

NEW WATER UNDER EXISTING SEWER

CASE 4

NOTES

1. THIS STANDARD APPLIES TO PIPES UP TO AND INCLUDING 16" DIAMETER. ALL CROSSINGS OF LARGER DIAMETER SHALL BE AS APPROVED BY THE DISTRICT.
2. ALL NEW DUCTILE IRON SHALL BE WRAPPED IN POLYETHYLENE FILM IN TUBE FORM PER DISTRICT CONSTRUCTION SPECIFICATIONS.
3. WHERE SEWER CROSSES BELOW A WATER MAIN, WITH 1' OR MORE OF VERTICAL CLEARANCE, NO SPECIAL INSTALLATION IS REQUIRED.
4. NEW PIPE UNDER EXISTING–CASE 5 SHALL BE USED WHEN THE EXISTING PIPE HAS A JOINT OVER OR WITHIN 2' OF THE NEW TRENCH.
5. ANY PIPE–PIPE CROSSING WITH LESS THAN 6" VERTICAL CLEARANCE SHALL NOT BE INSTALLED WITHOUT APPROVAL OF THE DISTRICT.
6. WATER MAIN LOWERING PER STD. DETAIL.
7. SEE ENGINEER'S APPROVED LIST FOR APPROVED COUPLINGS.

NEW PIPE UNDER EXISTING

CASE 5 – SEE NOTE 4

D PIPE CROSSING DETAIL

NOT TO SCALE

I. MATERIAL SPECIFICATIONS:

1. BEDDING MATERIAL:
   - A.) PEA GRAVEL– CONFORMING TO CALTRANS SECTION 68–1.025, PERMEABLE MATERIAL, CLASS 1, TYPE B.
   - B.) CL 2 AB. – CONFORMING TO CALTRANS SECTION 26–1.02A, CLASS 2 AGGREGATE BASE, 3/4" MAXIMUM.
   - C.) PERMEABLE – CONFORMING TO CALTRANS SECTION 68–1.025 CLASS 2 PERMEABLE MATERIAL.
2. AGGREGATE BASE:
   - A.) CL 2 AB. – CONFORMING TO CALTRANS SECTION 26–1.02A, CLASS 2 AGGRIGATE BASE, 3/4" MAXIMUM.
3. DRAIN ROCK:
   - A.) NO. 3 ROCK– SHALL BE A WASHED ROCK OF THE NOMINAL SIZE DESIGNATED AS 1" TO 2".
4. GABION ROCK:
   - A.) GABION ROCK– SHALL BE A WASHED OR NON–WASHED ROCK OF THE NOMINAL SIZE DESIGNATED AS 4" TO 12".
5. NATIVE MATERIAL:
   - A.) NATIVE MATERIAL– NATIVE MATERIAL USED AS BACKFILL SHALL BE FREE OF ORGANIC MATTER, REFUSE OR OTHER UNSATISFACTORY MATERIALS, STONES, OR LUMPS GREATER THAN OR EXCEEDING 3" IN GREATEST DIMENSION.
6. SHALE MATERIAL:
   - A.) SHALE MATERIAL– SHALE MATERIAL SHALL MEET THE QUALITY REQUIREMENTS FOR CL 2 AB AND CONTAIN ENOUGH FINE MATERIALS TO BE ABLE TO BE COMPACTED TO 95% RC IN A TIGHT SUSTAINABLE MATRIX.

II. COMPACTION REQUIREMENTS:

1. BEDDING MATERIAL:
   - A.) PEA GRAVEL SHALL EITHER BE HAND TAMPED UNDER AND AT THE SIDES OF THE PIPES IN LIFTS NOT GREATER THAN 6" OR SHAPED AND COMPACTED PRIOR TO PIPE INSTALLATION.
   - B.) CL 2 AB SHALL MEET THE ABOVE REQUIREMENTS AND SHALL ADDITIONALLY BE COMPACTED UNDER THE PIPE TO 90% RC AND UP TO THE SPRING LINE OF THE PIPE TO 90% RC IN TWO SEPERATE LIFTS RESULTING IN A FIRM UNYIELDING BEDDED TRENCH. JETTING SHALL NOT BE ALLOWED.
2. AGGREGATE BASE:
   - A.) AGGREGATE BASE SHALL BE COMPACTED WITH MECHANICAL HAND OPERATED, OR EQUIPMENT MOUNTED OR TOWED METHODS TO ACHIEVE THE REQUIRED COMPACTION. IN ANY EVENT, COMPACTION METHODS SHALL NOT DAMAGE THE PIPE, EXCEED THE LOADING CAPACITY OF THE PIPE, OR RESULT IN A CHANGE TO THE DESIGN PIPE SLOPE REQUIRED OR DEFLECTION UNITS. JETTING SHALL NOT BE ALLOWED.
3. DRAIN ROCK:
   - A.) DRAIN ROCK SHALL BE CONSOLIDATED WITH A SURFACE VIBRATOR.
4. SHALE MATERIAL:
   - A.) SHALE SHALL MEET THE COMPACTION REQUIREMENTS FOR CL 2 AB.
5. NATIVE MATERIAL:
   - A.) NATIVE MATERIAL COMPACTED TO 90% RC SHALL MEET THE COMPACTION REQUIREMENTS OF CL 2 AB. NATIVE MATERIAL COMPACTED TO LESS THAN 90% RC MAY BE COMPACTED BY WHEEL ROLLING.

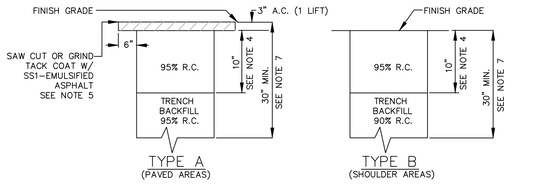

TRENCH BACKFILL AND SURFACING

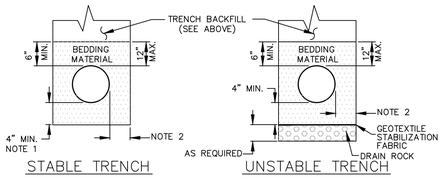

PIPE BEDDING

HCSD STD DWG: WS–100A AND WS–100B

B TYPICAL TRENCH DETAILS

NOT TO SCALE

NOTES:

1. $\frac{1}{2}$ PIPE O.D. OR 4" MIN. WHEN EXCAVATION IS IN ROCKY GROUND.
2. PIPE DIAMETER 18" OR LESS: MIN., 9" MAX/PIPE DIA. GREATER THAN 18": 9" MIN., 12" MAX.
3. RELATIVE COMPACTION DESIGNATED R.C.
4. THE MINIMUM STREET STRUCTURAL SECTION SHALL BE 3" A.C. ON 10" A.B. OR MATCH EXISTING PAVEMENT, WHICHEVER IS THICKER, SPECIFIED ON PLANS, OR REQUIRED BY ENCROACHMENT PERMIT.
5. SAW CUT OR GRIND PAVEMENT SIX INCHES FROM EDGE OF TRENCH AFTER TRENCH IS BACKFILLED.
6. MINIMUM PIPE COVER SHALL BE 36" WATER, 42" SEWER FROM TOP OF PIPE.
7. NEW STREETS AND SHOULDER AREAS UNDER CONSTRUCTION SHALL BE COMPACTED TO 95% RELATIVE COMPACTION FOR A MIN. DEPTH OF 30" PER CALTRANS SECTION 19–5.03.
8. INSTALL #12 COPPER COATED TRACER WIRE ON/OVER ALL NON–METALLIC MAINS.

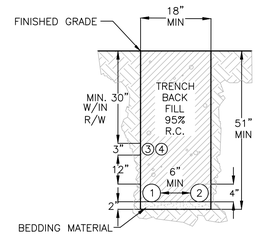

NOTES:

1. ELECTRIC
2. GAS
3. TELEPHONE
4. CATV
5. RELATIVE COMPACTION DESIGNATED R.C

C JOINT UTILITIES TRENCH

NOT TO SCALE

LOCATIONS AND ELEVATIONS SHOWN ARE PROVIDED FOR INFORMATION ONLY. SUCH INFORMATION MAY NOT BE COMPLETE OR ACCURATE. CONTRACTOR IS RESPONSIBLE FOR CONTACTING ALL AGENCIES INVOLVED AND VERIFYING LOCATIONS OF ALL UTILITIES THAT MAY BE IMPACTED BY HIS/HER WORK.

UNAUTHORIZED CHANGES & USES: THE ENGINEER PREPARING THESE PLANS WILL NOT BE RESPONSIBLE FOR, OR LIABLE FOR, UNAUTHORIZED CHANGES TO OR USES OF THESE PLANS. ALL CHANGES TO THE PLANS MUST BE IN WRITING AND MUST BE APPROVED BY THE PREPARER OF THESE PLANS.

FOR PLAN REVIEW ONLY - NOT FOR CONSTRUCTION

PLANS CERTIFIED FOR CONSTRUCTION BY ENGINEER OF RECORD ON _____ SIGNATURE

REVISIONS	BY

PACIFIC AFFILIATES
CONSULTING ENGINEERS
900 W. WATERFRONT DRIVE, EUREKA, CA 95501
TEL (707) 445-3001 • FAX (707) 445-3003

REGISTERED PROFESSIONAL ENGINEER L SCHNEIDER EXP. 12-31-2020 STATE OF CALIFORNIA CIVIL

PRELIMINARY

DETAILS

PACIFIC AFFILIATES, INC. HEREBY EXPRESSLY RESERVES ITS COMMON LAW COPYRIGHT AND OTHER PROPERTY RIGHTS IN THESE PLANS. THESE PLANS AND DRAWINGS ARE NOT TO BE REPRODUCED, CHANGED OR COPIED IN ANY FORM OR MANNER WHATSOEVER, NOR ARE THEY TO BE ASSIGNED TO ANY THIRD PARTY, WITHOUT FIRST OBTAINING THE EXPRESS WRITTEN PERMISSION OF PACIFIC AFFILIATES, INC. IN THE EVENT OF UNAUTHORIZED REUSE OF THESE PLANS BY ANY THIRD PARTY, THE UNAUTHORIZED USER AGREES TO INDEMNIFY AND HOLD PACIFIC AFFILIATES, INC. HARMLESS FROM ANY AND ALL LIABILITIES, DAMAGES, LOSSES, AND LITIGATION EXPENSES (INCLUDING ATTORNEY'S FEES AND COSTS OF SUIT) ARISING OUT OF ANY UNAUTHORIZED REUSE OF THESE PLANS BY THE UNAUTHORIZED USER OR ANY PARTY WHICH OBTAINS THE PLANS FROM OR THROUGH THE UNAUTHORIZED USER. ANY UNAUTHORIZED USER AGREES TO DEFEND PACIFIC AFFILIATES, INC. AGAINST ANY CLAIM, LAWSUIT OR LEGAL PROCEEDING BROUGHT BY ANY THIRD PARTY ARISING OUT OF ANY UNAUTHORIZED REUSE OF THESE PLANS BY THE UNAUTHORIZED USER. THE UNAUTHORIZED USER ALSO AGREES TO PAY ANY AND ALL JUDGMENTS, SETTLEMENTS, LITIGATION EXPENSES (INCLUDING ATTORNEY'S FEES AND COSTS OF SUIT), AND OTHER MONEY DAMAGES ARISING OUT OF ANY UNAUTHORIZED REUSE OF THESE PLANS BY THE UNAUTHORIZED USER OR ANY PARTY WHICH OBTAINS THE PLANS FROM OR THROUGH THE UNAUTHORIZED USER.

CITY OF EUREKA
WATERFRONT DRIVE
EUREKA, CA 95501
APN 002-241-013

Date: DECEMBER 4, 2020
Scale: AS NOTED
Drawn by: NM

SHEET NUMBER
C-7.4

JOB NUMBER
20-2334

GENERAL NOTES

ALL CONSTRUCTION SHALL BE DONE IN ACCORDANCE WITH THE:
-- 2019 CALIFORNIA BUILDING CODE (CBC)
-- 2019 CALIFORNIA ELECTRICAL CODE (CEC)
-- 2019 CALIFORNIA MECHANICAL CODE (CMC)
-- 2019 CALIFORNIA PLUMBING CODE (CPC)
-- 2019 CALIFORNIA ENERGY EFFICIENCY STANDARDS CODE (CEEBC)
-- 2019 CALIFORNIA FIRE CODE (CFC)
-- 2019 CALIFORNIA GREEN BUILDING STANDARDS CODE (CGBS)
-- PROJECT TO CONFORM WITH CBC 1A, CRC 337

APPROVED NUMBERS OR ADDRESSES SHALL BE PROVIDED IN SUCH A POSITION AS TO BE PLAINLY VISIBLE AND LEGIBLE FROM STREET OR ROAD FRONTING THE PROPERTY. SECTION 502.

NAILING SCHEDULE AS REQUIRED BY TABLE R602.3(1)

ALL CONCRETE SHALL BE MIN. 2500 PSI @ 28 DAYS

ALL WALLS SHALL BE FINISHED WITH 1/2" GWB AND CEILINGS FINISHED WITH 5/8" TYPE X GWB OR EQUAL

ALL FASTNERS & CONECTORS IN CONTACT WITH P.T. SHALL BE HOT DIPPED GALVENIZED.

PROVIDE 1 SQ. FT. OF UNDER FLOOR VENTILATION FOR EACH 150 SQ. FT. OF UNDER FLOOR AREA AND ATTIC AREA, CBC 1203, R806.2

ALL CONSTRUCTION IS LOCATED IN A STATE RESPONSIBILITY AREA (SRA) AND SHALL COMPLY WITH R327.

SAFETY GLAZING SHALL BE REQUIRED WITHIN 24" OF A DOOR EDGE OR WITHIN 36" OF A STAIRWAY, LANDING OR RAMP WHEN THE BOTTOM EDGE OF THE GLAZING IS LESS THAN 60" FROM THE FLOOR OR WALKING SURFACE. R308.4.2

LEGEND

CO	= SMOKE/CARBON MONOXIDE ALARM. ON EA. FLR. OUTSIDE OF EACH SLEEPING AREA IN THE IMMEDIATE VICINITY OF BEDROOMS. THEY SHALL BE INTERCONNECTED.
	WALL MOUNT LIGHT FIXTURE
	RECESSED CAN LIGHT FIXTURE
	CEILING MOUNT LIGHT FIXTURE
FLUOR.	CEILING MOUNT FLOURESCENT LIGHT FIXTURE
	WALL MOUNT BAR LIGHT FIXTURE
$3	THREE WAY SWITCH
$	SWITCH
	AFCI RECEPTACLE
GFCI	GFCI RECEPTACLE
	CEILING EXHAUST FAN
	DOWNSPOUT

ELECTRICAL NOTES

ALL GENERAL USE 15 & 20 AMP OUTLETS NOT REQUIRED TO BE GFCI PROTECTED SHALL BE AFCI PROTECTED.

BATHROOM EXHAUST FANS SHALL BE ENERGY STAR.

SMOKE AND CARBON MONOXIDE DETECTORS SHALL BE HARDWIRED WITH BATTERY BACK-UP AND ALARMS INTERCONNECTED.

RECEPTACLES MUST BE INSTALLED AT 12' O.C. MAXIMUM ALONG WALLS AND ON WALLS LONGER THAN 2 FEET (CEC 210.52)

CONCRETE-ENCASED ELECTRODE SHALL BE PROVIDED (CEC 250.50, 250.52(a) SHOWER FANS NEED TO BE WET LOCATION RATED WITH GFCI (CEC 410.10(d))

ALL 125 VOLT RECEPTACLES SHALL BE TAMPER RESISTANT (CEC 406.12)

AT LEAST ONE 20 AMP BRANCH CIRCUIT SHALL BE PROVIDED TO SUPPLY THE BATHROOM RECEPTACLE OUTLETS, WITH NO OTHER OUTLETS (NEC 210.11C.3)

ALL GENERAL USE 15 & 20 AMP OUTLETS SHALL BE LISTED TAMPER RESISTANT.

GFCI OUTLETS ARE REQUIRED FOR ALL KITCHEN RECEPTACLE OUTLETS, IN BATHROOMS, IN UNDER FLOOR SPACES AT OR BELOW GRADE LEVEL, IN EXTERIOR, IN GARAGE (CEC 210.8)

RECESSED CAN LIGHTS MUST BE IC RATED FOR DIRECT CONTACT TO INSULATION AND BE AIR-TIGHT TO PRECLUDE INFILTRATION FROM ATTIC INTO THE CONDITIONED SPACE.

THE ANNULAR SPACE BETWEEN THE WALL MEMBRANE AND THE LISTED ELECTRICAL BOX SHALL NOT EXCEED 1/8". SUCH BOXES ON OPPOSITE SIDES OF THE WALL SHALL BE SEPARATED BY NOT LESS THAN 24 INCHES AND OR PROTECTING BOTH BOXES WITH LISTED PUTTY PADS. R302.4.2, CBC 714.3.2.

THE FINISH WALL OR CEILING SURFACE SHALL HAVE NO GAPS OR OPEN SPACES GREATER THAN 1/8 INCH AT THE EDGE OF THE LISTED ELECTRICAL BOX, CEC 314.21.

THE FRONT EDGE OF THE LISTED ELECTRICAL BOX, PLASTER RING, EXTENSION RING, OR LISTED EXTENDER WILL NOT BE SET BACK OF THE FINISHED WALL OR CEILING SURFACE MORE THAN 4 INCH MAXIMUM. CEC 314.20

ALL 120-VOLT, SINGLE-PHASE, 15- AND 20-AMPERE BRANCH CIRCUITS SUPPLYING OUTLETS OR DEVICES INSTALLED IN DWELLING UNIT KITCHENS, FAMILY ROOMS, DINING ROOMS, LIVING ROOMS, PARLORS, LIBRARIES, DENS, BEDROOMS, SUNROOMS, RECREATION ROOMS, CLOSETS, HALLWAYS, LAUNDRY AREAS, OR SIMILAR ROOMS OR AREAS SHALL BE PROTECTED BY A LISTED COMBINATION-TYPE ARC-FAULT CIRCUIT INTERRUPTER, INSTALLED TO PROVIDE PROTECTION OF THE ENTIRE BRANCH CIRCUIT. CEC 210.12

ELECTRICAL PANEL BOARDS INSTALLED OUTDOORS NEED TO BE WEATHERPROOF AND LISTED FOR DAMP/WET LOCATIONS. CEC 408.37, 312.2(A)

GFCI PROTECTION WITH WEATHERPROOF COVERS REQUIRED FOR EXTERIOR RECEPTACLE OUTLETS. CEC 210.8 (A) (3), 406.9 (A) (B)

VERIFY THAT THE TWO OR MORE SMALL APPLIANCE BRANCH CIRCUITS HAVE NO OTHER OUTLETS OTHER THAN RECEPTACLE OUTLETS IN THE PANTRY, DINING ROOM, AND BREAKFAST ROOM, AS WELL AS AN ELECTRIC CLOCK RECEPTACLE AND ELECTRIC LOADS ASSOCIATED WITH GAS-FIRED APPLIANCES. CEC 210.52(B)(1) AND (2).

PROVIDE BATHROOM EXHAUST FAN VENTED TO THE EXTERIOR FOR EACH BATHROOM CONTAINING A BATHTUB, SHOWER, OR COMBINATION FOR PURPOSE OF HUMIDITY CONTROL WITH A MINIMUM OF 50 CFM. IF BATH FAN INCLUDES A LIGHT, THEY MUST BE SWITCHED SEPARATELY. BATH FANS MUST BE CONTROLLED BY A HUMIDITY CONTROL. CRC 303.3 .1, CBC 1 203.4.2.1, CMC 402.5

NEED A RECEPTACLE OUTLET INSTALLED WITHIN 25' PROVIDED FOR SERVICING MECHANICAL EQUIPMENT. CEC 210.63

INDIVIDUAL BRANCH CIRCUITS ARE REQUIRED FOR CENTRAL HEATING EQUIPMENT. CEC 422.12

NEED A WALL-SWITCH-CONTROLLED LIGHTING OUTLET OR A LIGHTING OUTLET CONTAINING A SWITCH AT THE ENTRANCE TO EQUIPMENT REQUIRING SERVICING. CEC 210.70 (A) (3).

NEED EXTERIOR LIGHTING OUTLETS AT OUTDOOR ENTRANCES OR EXIT S. CEC 210.70 (A) (2).

ALL LUMINARIES IN ROOMS OTHER THAN KITCHEN, BATHROOMS, GARAGE, LAUNDRY ROOMS OR UTILITY ROOMS MUST BE HIGH EFFICACY OR CONTROLLED BY A MANUALLY-ON/ OCCUPANT SENSOR-OFF TYPE SWITCH OR DIMMER. CLOSETS LESS THAN 70 SF. ARE EXEMPT.

LIGHTING INSTALLED IN BATHROOMS SHALL MEET THE FOLLOWING--A MINIMUM OF ONE HIGH EFFICACY LUMINARIES SHALL BE INSTALLED IN EACH BATHROOM, AND ALL OTHER LIGHTING INSTALLED IN EACH BATHROOM SHALL BE HIGH EFFICACY OR CONTROLLED BY VACANCY SENSORS.

ALL EXTERIOR LIGHTING MUST BE HIGH EFFICACY AND MUST BE CONTROLLED BY A MANUAL ON AND OFF SWITCH AND PHOTO CONTROL AND MOTION SENSOR.

BOND ALL METAL GAS AND WATER LINES. CEC 250.104(A) (1) 250.104 (B), 250.68

ALL 120-VOLT, SINGLE-PHASE, 15- AND 20-AMPERE BRANCH CIRCUITS SUPPLYING OUTLETS OR DEVICES INSTALLED IN DWELLING UNIT KITCHENS, FAMILY ROOMS, DINING ROOMS, LIVING ROOMS, PARLORS, LIBRARIES, DENS, BEDROOMS, SUNROOMS, RECREATION ROOMS, CLOSETS, HALLWAYS, LAUNDRY AREAS, OR SIMILAR ROOMS OR AREAS SHALL BE PROTECTED BY A LISTED COMBINATION-TYPE ARC-FAULT CIRCUIT INTERRUPTER, INSTALLED TO PROVIDE PROTECTION OF THE ENTIRE BRANCH CIRCUIT. CEC 210.12

MECHANICAL & PLUMBING NOTES

WATER HEATER SHALL BE SECURED TO RESIST EARTHQUAKES WITH APPROVED SEISMIC STRAPPING. ONE AT THE UPPER 1/3 AND ONE AT THE LOWER 1/3 OF VERTICAL DIMENSION WITH THE LOWER STRAP BEING A MINIMUM OF 4" ABOVE CONTROLS (CPC 507.2).

WATER HEATER TEMPERATURE/PRESSURE RELIEF VALVE WITH DRAIN TO EXTERIOR OF BUILDING (CPC 504.4, 504.6, 608.5).

THE PASSAGEWAY SHALL BE UNOBSTRUCTED AND SHALL HAVE SOLID FLOORING A MINIMUM OF 24" WIDE FROM THE ENTRANCE OPENING TO THE APPLIANCE. MINIMUM 30"X30" WORK PLATFORM IN FRONT OF THE SERVICE AREA. A PERMANENT 120 VOLT RECEPTACLE AND A LIGHTING FIXTURE SHALL BE INSTALLED NEAR THE FAU (CMC 904.10.2, 904.10.3, 904.10.4).

VENT CLOTHES DRYER TO OUTSIDE OF BUILDING. VENT LENGTH SHALL BE 14 FEET MAXIMUM (CMC 504.3)

WATER HEATER, FORCED AIR UNIT (FAU) AND FIREPLACE TO BE CALIFORNIA APPROVED AND INSTALLED PER THE MANUFACTURER'S INSTALLATION INSTRUCTIONS.

APPLIANCES INSTALLED IN GARAGES SHALL BE PROTECTED FROM PHYSICAL DAMAGE THROUGH THE INSTALLATION OF PROTECTIVE BARRIERS OR BOLLARDS (CPC 507.13.1, CMC 308.1.1).

SHOWERS AND TUB SHOWER COMBINATIONS SHALL BE PROVIDED WITH INDIVIDUAL CONTROL VALVES OF THE PRESSURE BALANCE, THERMOSTATIC, OR COMBINATION PRESSURE BALANCE AND THERMOSTATIC TYPES THAT PROVIDE SCALD AND THERMAL SHOCK PROTECTION (CPC 418.0).

VALVES FOR BATH TUB FILLERS AND WHIRLPOOL TUB FILTERS SHALL LIMIT HOT WATER TEMPERATURE TO 120 DEGREES FAHRENHEIT (CPC 409.4).

JACUZZI TUBS, VERIFY GFCI PROTECTION, ACCESSIBILITY, BONDING OF ELECTRICAL EQUIPMENT AND GROUNDED METAL PARTS. CEC 680.71, 680.73, 680.74, 210.23 (A) (2).

THE MAXIMUM ALLOWABLE LEAD CONTENT IN PIPES, PIPE FITTINGS, PLUMBING FITTINGS, AND FIXTURES INTENDED TO CONVEY OR DISPOSE WATER FOR HUMAN CONSUMPTION SHALL BE NOT MORE THAN A WEIGHTED AVERAGE OF 0.25 PERCENT WITH RESPECT TO THE WETTED SURFACES OF PIPES, PIPE FITTINGS, PLUMBING FITTINGS, AND FIXTURES. FOR SOLDER AND FLUX, THE LEAD CONTENT SHALL BE NOT MORE THAN 0.2 PERCENT WHERE USED IN PIPING SYSTEMS THAT CONVEY OR DISPOSE WATER FOR HUMAN CONSUMPTION. CPC 604.2

APPROVED NON-REMOVABLE BACKFLOW PREVENTION DEVICES SHALL BE PROVIDED ON HOSE BIBS. CPC 602.3

APPLIANCES IN ATTIC OTIEED MINIMUM 24" WIDE SOLID WOOD PASSAGEWAY AND MINIMUM 30" X 30" WORK PLATFORM IN FRONT OF SERVICE AREA. A PERMANENT 120-VOLT RECEPTACLE OUTLET AND A LIGHTING FIXTURE SHALL BE INSTALLED NEAR THE APPLIANCE. THE SWITCH CONTROLLING THE LIGHTING FIXTURE SHALL BE LOCATED AT THE ENTRANCE TO THE PASSAGEWAY. CPC 509.4.4, CPC 509.4.5

HYDRONIC PIPE AND TUBING SHALL COMPLY WITH THE APPLICABLE STANDARDS REFERENCED IN TABLE 1210.1 AND SHALL BE APPROVED FOR USE BASED ON THE INTENDED PURPOSE. MATERIALS SHALL BE RATED FOR THE OPERATING TEMPERATURE AND PRESSURE OF THE SYSTEM AND SHALL BE COMPATIBLE WITH THE TYPE OF TRANSFER MEDIUM. PIPE FITTINGS AND VALVES SHALL BE APPROVED FOR THE INSTALLATION WITH THE PIPING. MATERIALS TO BE INSTALLED AND SHALL BE IN ACCORDANCE WITH THE APPLICABLE STANDARDS REFERENCED IN TABLE 1210.1. EXTERIOR PIPING SHALL BE PROTECTED AGAINST FREEZING, UV RADIATION, CORROSION AND DEGRADATION. EMBEDDED PIPE OR TUBING SHALL COMPLY WITH SECTION 1221.2. CMC 1210.1

A SEDIMENT TRAP SHALL BE INSTALLED DOWNSTREAM OF THE APPLIANCE SHUTOFF VALVE AS CLOSE TO THE APPLIANCE AS POSSIBLE. CPC 1211.8

WHERE WATER HEATER IS LOCATED IN A SPACE WHERE DAMAGE MAY RESULT FROM A LEAKING WATER HEATER, A WATERTIGHT PAN OF CORROSION RESISTANT MATERIALS SHALL BE INSTALLED BENEATH THE WATER HEATER WITH A MINIMUM THREE-QUARTER INCH DIAMETER DRAIN TO THE EXTERIOR. CPC 507.4

PROVIDE NON-REMOVABLE BACKFLOW PREVENTION DEVICES ON EXTERIOR HOSE BIBS. CPC 603.4.6, 603.5.7, 602.3

NO UNDERFLOOR CLEANOUT SHALL BE LOCATED MORE THAN 20 FEET OF AND ACCESS DOOR. MINIMUM CLEARANCE FOR 2" CLEANOUT IS 12" AND MINIMUM CLEARANCE FOR MORE THAN 2" IS 18". CPC 707.3

A SEDIMENT TRAP SHALL BE INSTALLED DOWNSTREAM OF THE APPLIANCE SHUTOFF VALVE AS CLOSE TO THE APPLIANCE AS POSSIBLE. CMC 1312.7

ALL GAS APPLIANCES SHALL BE VENTED IN ACCORDANCE WITH CMC CHAPTER 7.

ANY INSTALLED GAS FIREPLACE SHALL BE A DIRECT-VENT SEALED-COMBUSTION TYPE. ANY INSTALLED WOODSTOVE OR PELLET STOVE SHALL COMPLY WITH U.S. EPA NEW SOURCE PERFORMANCE STANDARDS (NSPS) EMISSION LIMITS AS APPLICABLE AND SHALL HAVE A PERMANENT LABEL INDICATING THEY ARE CERTIFIED TO MEET THE EMISSION LIMITS. WOODSTOVES, PELLET STOVES AND FIREPLACES SHALL ALSO COMPLY WITH APPLICABLE LOCAL ORDINANCES. CGBSC 4.503

UNAUTHORIZED CHANGES & USES: THE ENGINEER PREPARING THESE PLANS WILL NOT BE RESPONSIBLE FOR, OR LIABLE FOR, UNAUTHORIZED CHANGES TO OR USES OF THESE PLANS. ALL CHANGES TO THE PLANS MUST BE IN WRITING AND MUST BE APPROVED BY THE PREPARER OF THESE PLANS.

WET STAMPED AND SIGNED PLANS BY THE ENGINEER OF RECORD SIGNIFY THAT ALL INFORMATION FROM THE CALCULATIONS HAS BEEN TRANSFERRED TO THE PLANS.

REVISIONS	BY

PACIFIC AFFILIATES
CONSULTING ENGINEERS
930 W. WATERFRONT DRIVE, EUREKA, CA 95501
TEL (707) 445-3001 • FAX (707) 445-3003

PRELIMINARY
REGISTERED PROFESSIONAL ENGINEER
DEC. 12 - 2020
CIVIL
STATE OF CALIFORNIA

TITLE SHEET

PACIFIC AFFILIATES, INC. HEREBY EXPRESSLY RESERVES ITS COMMON LAW COPYRIGHT AND OTHER PROPERTY RIGHTS IN THESE PLANS. THESE PLANS ARE NOT TO BE USED BY ANY PERSON FOR ANY PURPOSE CHANGED OR COPIED IN ANY FORM OR MANNER WHATSOEVER, WITHOUT FIRST OBTAINING THE EXPRESS WRITTEN PERMISSION AND CONSENT OF PACIFIC AFFILIATES, INC. TO BE LIABLE FOR ANY DAMAGES RESULTING FROM THE UNAUTHORIZED USE OF THESE PLANS BY ANY PERSON, FIRM OR CORPORATE ENTITY FOR ANY PURPOSE WHATSOEVER.

CITY OF EUREKA
PUBLIC RESTROOMS,
NON-MOTORIZED FLOATING DOCK
& AQUATIC RESPONSE CENTER
WATERFRONT DRIVE
EUREKA, CA 95501
APN 002-241-013

Date:	
08/20/2020	
Scale:	Drawn by:
AS NOTED	TS

SHEET NUMBER
T-1

JOB NUMBER
2334

LEGEND

- CEILING FAN
- $_{3}$ — THREE WAY SWITCH
- $ — SWITCH
- RECEPTACLE
- GFCI — GFCI RECEPTACLE
- 2-BULB CEILING MOUNTED LIGHT
- EXIT — EMERGENCY EXIT LIGHT (CEC 410.10 (A))
- EXTERIOR WET LOCATION RATED PHOTO CELL
- FLUOR. — 4 TUBE - 4 FOOT FLOURESCENT LIGHT FIXTURE
- CO — SMOKE/CARBON MONOXIDE ALARM. THEY SHALL BE INTERCONNECTED. LOCATED BTWN 3 FT. & 6 FT. ABV. FLR. OR AT THE ANTICIPATED HEIGHT OF THE OCCUPANTS HEADS.
- <N> 8" CONCCRETE MASONRY UNIT FACED WITH WHOLE BRICK
- <N> 2X6 PARTITION WALL

DOOR SCHEDULE

MARK	SIZE	TYPE	REMARKS	LOCK SETS
A	12'-0" x 12'-0"	NON-INSULATED GARAGE DOOR	MANUAL ROLL-UP	INTERIOR DOOR LOCK ONLY
B	3'-0" x 6'-8"	SELF CLOSING SOLID CORE FLUSH METAL	HBFD PLACARD	ADA ENTRY LEVER W/ DEAD BOLT
C	3'-0" x 6'-8"	SELF CLOSING SOLID CORE FLUSH METAL	ADA GENDER PLACARD	ADA ENTRY LEVER W/ DEAD BOLT

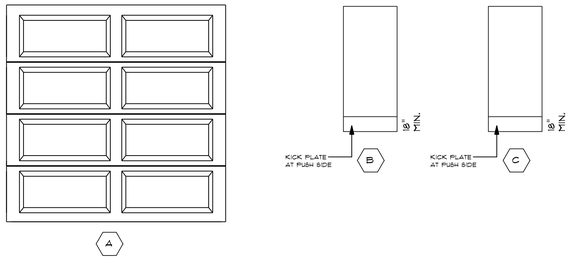

DOOR TYPES
SCALE: 1/4" = 1'-0"

DOOR NOTES

NOTE:

1. INTERIOR LANDINGS TO BE LEVEL.
2. EXTERIOR LANDINGS MAY HAVE 1/4"/FOOT MAX. SLOPE.
3. FIRE RATED CORRIDORS WITH DOORS SWINGING INTO CORRIDOR TO BE 6'-0" WIDE CORRIDOR MIN.
4. WALKS TO HAVE 60"X60" AREA EVERY 200' MAX.

DOOR NOTES:

1. ALL DOORWAYS TO HAVE 32" CLEAR ACCESS MIN. AND DOORS SHALL OPEN 90 DEGREES MIN.
2. WHERE NARROR DOORS ARE USED, A 10" HIGH SMOOTH PANEL SHALL BE INSTALLED ON THE PUSH SIE OF THE DOOR, WHICH WILL ALLOW THE DOOR TO BE OPENED BY A WHEELCHAIR FOOTREST WITHOUT CREATING A TRIP OR HAZARDOUS CONDITION.
3. UNINTERRUPTED SPACE AT THE BOTTOM OF DOOR (KICK PLATE) TO BE 10" EXCEPT FOR AUTOMATIC DOORS.
4. NO REVOLVING DOORS ALLOWED RO ACCESSIBLE DOORS.
5. THRESHOLDS: ANY CHANGE IN LEVEL BETWEEN 1/4" AND 1/2" IS TO BE BEVELED AT A MAX. GRADIENT OF 1:2 (1 UNIT RISE TO 2 UNIT RUN). VERTICAL EDGES ARE 1/4" MAX. CHANGES GREATER THAN 1/2" USE RAMP.
6. LANDINGS OR FLOORS ARE NO MORE THAN 1/2" LOWER THAN TOP OF THRESHOLD.
7. EVERY REQUIRED EXIT DOORWAY MUST BE 3'-0"X6'-8" MINIMUM.
8. A LEVEL FLOOR OR LANDING IS TO BE PROVIDED ON EACH SIDE OF ALL DOORS.

HARDWARE NOTES

1. OPERABLE FROM A SINGLE EFFORT, REQUIRING NO TIGHT GRASPING, PINCHING OR WRIST-TWISTING (LEVERS, PUSH-PULL OR PANIC DEVICES).
2. MOUNTED AT 30" - 44" HIGH ABOVE FINISH FLOORS (A.FF.)
3. OPEN ABLE FROM INSIDE WITHOUT USE OF KEY, SPECIAL KNOWLEDGE OR EFFORT, AND OPEN IN EGRESS DIRECTION (AT REQUIRED EXIT DOORS).

HARDWARE

1. APPROVED BY BUILDING DEPARTMENT PRIOR TO INSTALLING.
2. DOOR CLOSERS (IF USED) MUST BE SET SO THAT IT TAKES AT LEAST 3 SECONDS TO CLOSE FROM AN OPEN POSITION OF 70 DEGREES TO WITHIN 3" OF LATCH.

LEVEL MANEUVERING CLEARANCES

1. SHALL PROVIDE A LEVEL AREA WITH DIMENSION OF AT LEAST 60" IN THE DIRECTION OF DOOR SWING AND 48" OPPOSIT TO THE DOOR SWING.

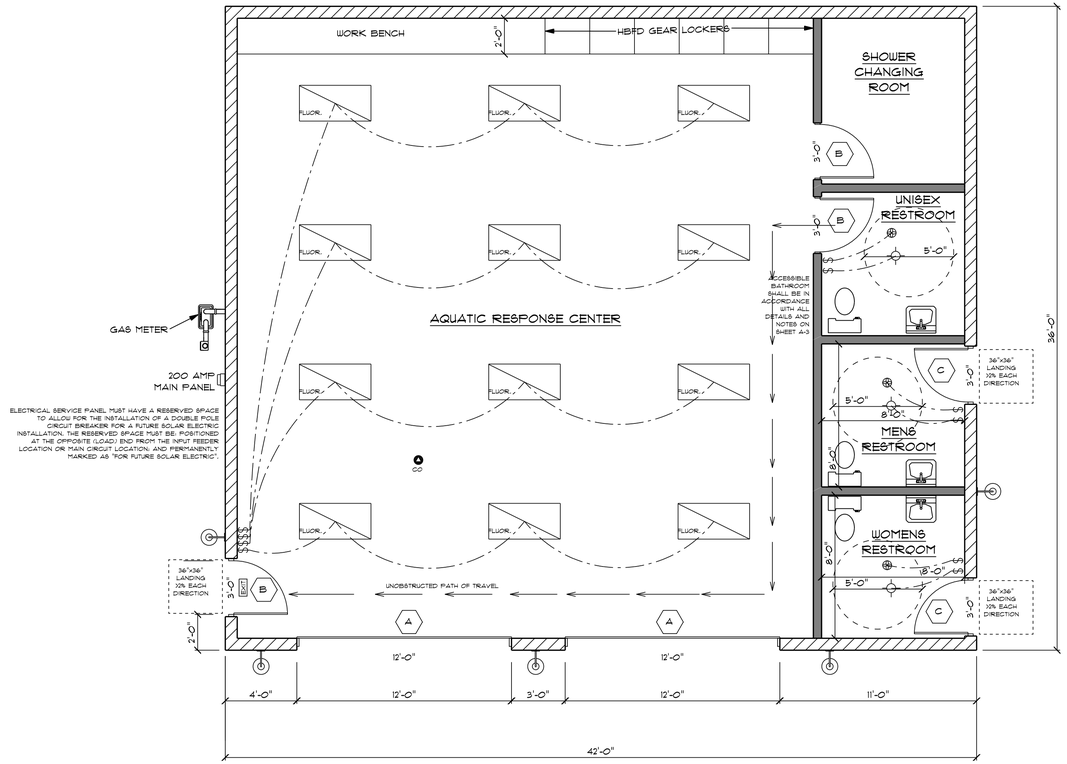

FLOOR PLAN
SCALE: 1/4" = 1'-0"

LIGHT POLLUTION REDUCTION:

1.) SHIELD ALL EXTERIOR LUMINARIES OR USE CUTOFF LUMINARIES.
2.) CONTAIN INTERIOR LIGHTING WITHIN EACH SOURCE.
3.) ALLOW NO MORE THAN .01 HORIZONTAL FOOT CANDLE 15 FT. BEYOND THE SITE.
4.) CONTAIN ALL EXTERIOR LIGHTING WITHIN PROPERTY BOUNDARIES.

FLOOR AREA
MENS RESTROOM - 64 SF
WOMENS RESTROOM - 64 SF
HBFD AQUATIC RESPONSE CENTER - 1384 SF
TOTAL AREA - 1512 SF

NORTH

WET STAMPED AND SIGNED PLANS BY THE ENGINEER OF RECORD SIGNIFY THAT ALL INFORMATION FROM THE CALCULATIONS HAS BEEN TRANSFERRED TO THE PLANS.

UNAUTHORIZED CHANGES & USES: THE ENGINEER PREPARING THESE PLANS WILL NOT BE RESPONSIBLE FOR, OR LIABLE FOR, UNAUTHORIZED CHANGES TO OR USES OF THESE PLANS. ALL CHANGES TO THE PLANS MUST BE IN WRITING AND MUST BE APPROVED BY THE PREPARER OF THESE PLANS.

REVISIONS	BY

PACIFIC AFFILIATES
CONSULTING ENGINEERS
930 W. WATERFRONT DRIVE, EUREKA, CA 95501
TEL (707) 445-3001 • FAX (707) 445-3003

PRELIMINARY
REGISTERED PROFESSIONAL ENGINEER — JEFFREY L. SCHNEIDER — No. 12... — EXP. 12-... — CIVIL — STATE OF CALIFORNIA

FLOOR PLAN
ELECTRICAL PLAN

PACIFIC AFFILIATES, INC. HEREBY EXPRESSLY RESERVES ITS COMMON LAW COPYRIGHT AND OTHER PROPERTY RIGHTS IN THESE PLANS AND DRAWINGS ARE NOT TO BE REPRODUCED, CHANGED OR COPIED IN ANY FORM OR MANNER WHATSOEVER NOR ARE THEY TO BE ASSIGNED TO ANY THIRD PARTY WITHOUT FIRST OBTAINING WRITTEN PERMISSION AND CONSENT.

CITY OF EUREKA
PUBLIC RESTROOMS,
NON-MOTORIZED FLOATING DOCK
& AQUATIC RESPONSE CENTER
WATERFRONT DRIVE
EUREKA, CA 95501
APN 002-241-013

Date:	
08/20/2020	
Scale:	Drawn by:
AS NOTED	TS

SHEET NUMBER
A-1

JOB NUMBER
2334

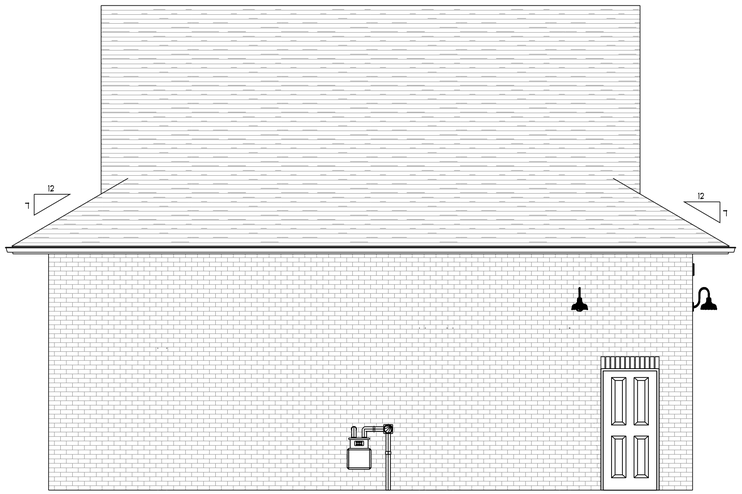

SOUTH ELEVATION

SCALE: 1/4" = 1'-0"

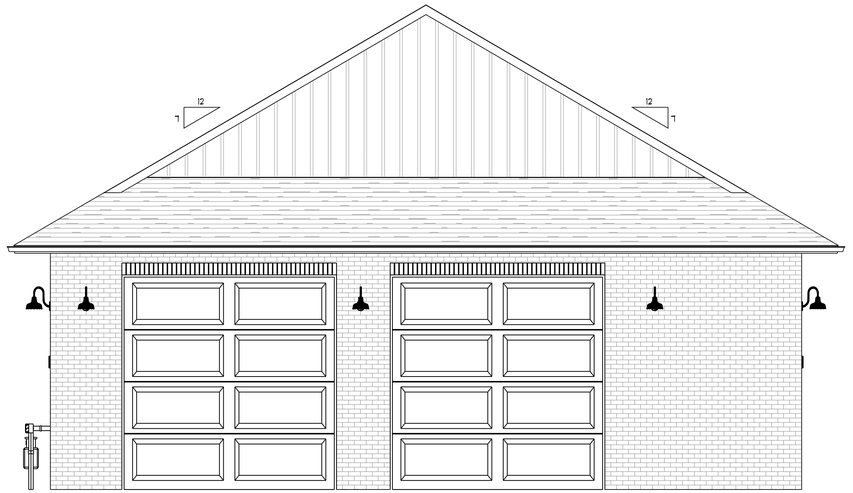

EAST ELEVATION

SCALE: 1/4" = 1'-0"

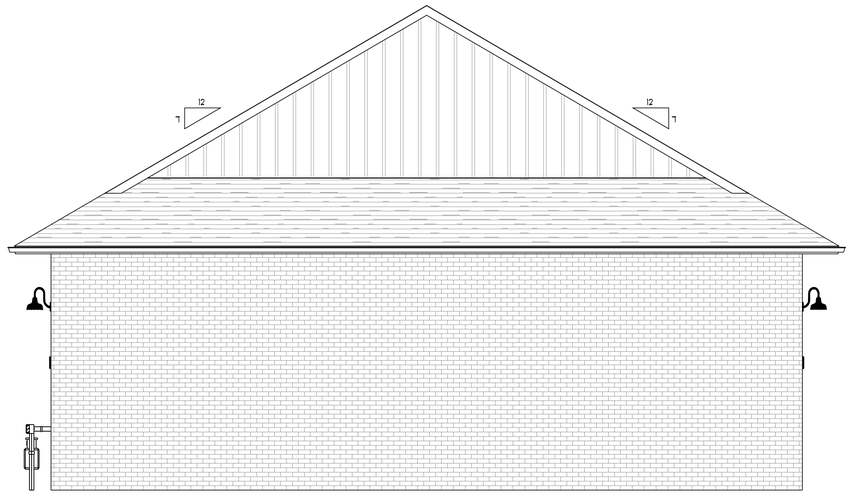

WEST ELEVATION

SCALE: 1/4" = 1'-0"

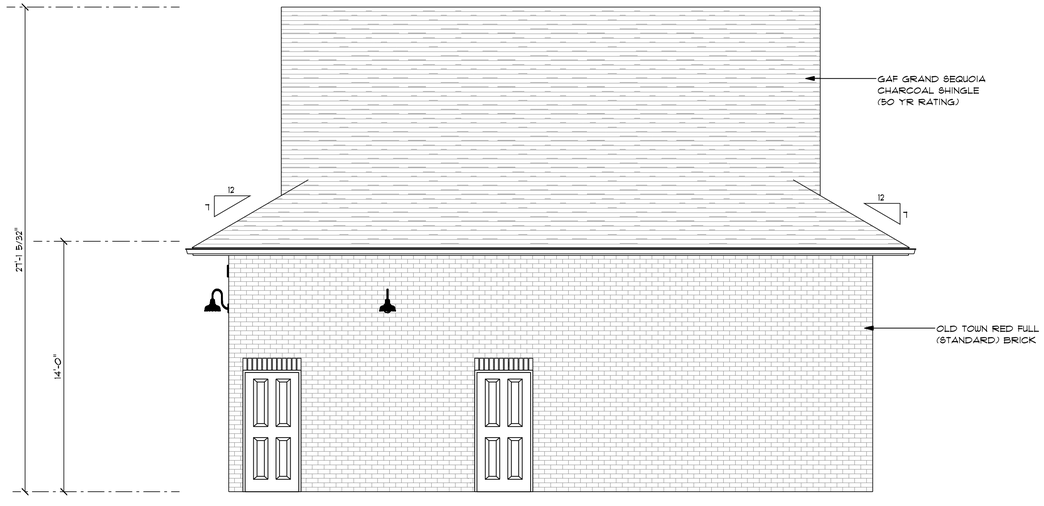

NORTH ELEVATION

SCALE: 1/4" = 1'-0"

UNAUTHORIZED CHANGES & USES: THE ENGINEER PREPARING THESE PLANS WILL NOT BE RESPONSIBLE FOR, OR LIABLE FOR, UNAUTHORIZED CHANGES TO OR USES OF THESE PLANS. ALL CHANGES TO THE PLANS MUST BE IN WRITING AND MUST BE APPROVED BY THE PREPARER OF THESE PLANS.

WET STAMPED AND SIGNED PLANS BY THE ENGINEER OF RECORD SIGNIFY THAT ALL INFORMATION FROM THE CALCULATIONS HAS BEEN TRANSFERRED TO THE PLANS.

REVISIONS	BY

PACIFIC AFFILIATES
CONSULTING ENGINEERS
930 W. WATERFRONT DRIVE, EUREKA, CA 95501
TEL (707) 445-3001 • FAX (707) 445-3003

PRELIMINARY

REGISTERED PROFESSIONAL ENGINEER
CIVIL
STATE OF CALIFORNIA

ELEVATIONS

PACIFIC AFFILIATES, INC. HEREBY EXPRESSLY RESERVES ITS COMMON LAW COPYRIGHT AND OTHER PROPERTY RIGHTS IN THESE PLANS. THESE PLANS AND DRAWINGS ARE NOT TO BE REPRODUCED, CHANGED OR COPIED IN ANY FORM OR MANNER WHATSOEVER NOR ARE THEY TO BE ASSIGNED TO ANY THIRD PARTY WITHOUT FIRST OBTAINING THE EXPRESS WRITTEN PERMISSION AND CONSENT OF PACIFIC AFFILIATES. NOR ARE THEY ASSIGNED TO ANY THIRD PARTY WITHOUT ALSO OBTAINING WRITTEN PERMISSION AND CONSENT.

CITY OF EUREKA
PUBLIC RESTROOMS,
NON-MOTORIZED FLOATING DOCK
& AQUATIC RESPONSE CENTER
WATERFRONT DRIVE
EUREKA, CA 95501
APN 002-241-013

Date:	
08/20/2020	
Scale:	Drawn by:
AS NOTED	TB

SHEET NUMBER
A-2

JOB NUMBER
2334

NOTE:
THE FORCE REQUIRED TO ACTIVATE
ALL CONTROLS SHALL BE
NO GREATER THAN 5 POUNDS.

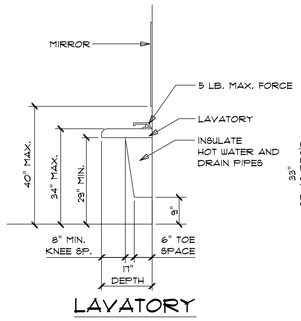

LAVATORY

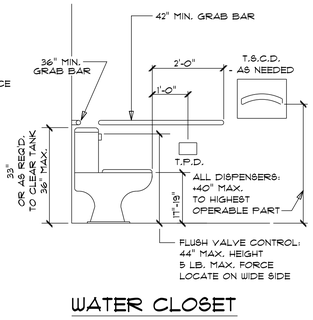

WATER CLOSET

NOTE:
REFER TO PLAN AND NOTES THIS SHEET FOR
ADDITIONAL INFORMATION

ACCESSIBLE FIXTURES & ACCESSORIES

1/2" = 1'-0"

GRAB BAR BLOCKING

1" = 1'-0"

ACCESSIBILITY NOTES

BUILDINGS AND PORTIONS THEREOF SHALL BE ACCESSIBLE TO PERSONS WITH DISABILITIES PER REQUIREMENTS SET FORTH IN THE AMERICANS WITH DISABILITIES ACT, THE UNIFORM BUILDING CODE , AND THE CALIFORNIA BUILDING CODE.
COPIES OF THESE CODE SECTIONS ARE AVAILABLE FROM THE DESIGN ENGINEER.

ACCESSIBLE WALKS & SIDEWALKS

1.) IF PROPOSED WALKS SLOPE GREATER THAN 1:20 (5%) THEY MUST COMPLY WITH RAMP REQUIREMENTS.

2.) WALKS ALONG AN ACCESSIBLE ROUTE MUST HAVE 48" MINIMUM WIDTH AND HAVE A SLIP RESISTANT SURFACE.

3.)CROSS SLOPE SHALL NOT EXCEED 1/4" PER FOOT.

4.) ABRUPT LEVEL CHANGES MAY NOT EXCEED 1/2", LEVEL CHANGES SHALL BE LEVELED WITH A SLOPE OF 1:2. < LEVEL CHANGES OF 1/4" MAY BE VERTICAL.

5.) A 60"x60" LEVEL AREA IS TO BE PROVIDED WHERE A DOOR SWINGS INTO THE ACCESSIBLE ROUTE OF TRAVEL. THE WALK IS TO EXTEND BEYOND THE STRIKE EDGE OF SUCH DOORS.

6.) AT LEAST 80" OF HEADROOM IS TO BE PROVIDED FROM ALL WALKWAY SURFACES TO OBSTRUCTIONS.

7.) WHEN MORE THAN ONE ROUTE OF TRAVEL IS PROVIDED, ALL ROUTES SHALL BE ACCESSIBLE.

ENTRANCES AND DOORS

1.) ALL ACCESSIBLE ENTRANCES SHALL BE PROVIDED WITH SIGNAGE IN ACCORDANCE WITH THE UNIFORM BUILDING CODE CALIFORNIA AMENDMENTS.

2.) REGARDLESS OF OCCUPANT LOAD, THERE SHALL BE A FLOOR OR LANDING ON EACH SIDE OF A DOOR.

3.) THE MAXIMUM EFFORT TO OPERATE DOORS SHALL NOT EXCEED 8-1/2 POUNDS FOR EXTERIOR DOORS AND 5 POUNDS FOR INTERIOR DOORS.

4.) THE BOTTOM 10" OF ALL DOORS EXCEPT AUTOMATIC AND SLIDING DOORS SHALL HAVE A SMOOTH UNINTERRUPTED SURFACE TO ALLOW THE DOOR TO BE OPENED BY A WHEELCHAIR FOOTREST WITHOUT CREATING A TRAP OR HAZARDOUS CONDITION.

5.) THE FLOOR OR LANDING SHALL NOT BE MORE THAN 1/2" LOWER THAN THE THRESHOLD OF THE DOORWAY.

6.) PRIMARY ENTRANCE DOORS AND PASSAGE DOORS SHALL BE EQUIPPED WITH LEVER OR PUSH-PULL HARDWARE THAT COMPLIES WITH U.B.C. SECTION 3304, OPENABLE FROM THE INSIDE WITHOUT THE USE OF A KEY OR ANY SPECIAL KNOWLEDGE.

ACCESSABLE KITCHENS & WET BARS

1.) MINIMUM OF 30"X48" CLEAR SPACE IS PROVIDED THAT ALLOWS A PERSON IN A WHEELCHAIR TO MAKE A PARALLEL APPROACH TO THE RANGE OR COOKTOP, AND EITHER A FORWARD OR PARALLEL APPROACH TO THE OVEN, DISHWASHER, REFRIGERATOR/FREEZER AND TRASH COMPACTOR. CABINETS, COUNTERS, SINKS, AND APPLIANCES.

COUNTERTOPS

1.) A MINIMUM LINEAR LENGTH OF 30" OF COUNTERTOP IS PROVIDED FOR THE KITCHEN SINK WHICH IS DESIGNED TO ENABLE REPOSITIONING TO A MINIMUM HEIGHT OF 28".

2.) A MINIMUM LINEAR LENGTH OF 30" OF COUNTERTOP IS PROVIDED FOR A WORK SURFACE WHICH IS DESIGNED TO ENABLE REPOSITIONING TO A MINIMUM HEIGHT OF 28".

3.) COUNTERTOPS AND SINKS ARE MOUNTED AT A MAXIMUM HEIGHT OF 34" ABOVE THE FLOOR.

4.) BASE CABINETS DIRECTLY UNDER SINK AND WORK SURFACE COUNTER AREAS DESIGNED FOR REPOSITIONING ARE REMOVEABLE TO PROVIDE CLEARANCE FOR A WHEELCHAIR.

exception: STONE, CULTURED STONE, AND TILED COUNTERTOPS MAY BE USED WITHOUT MEETING THE REPOSITIONING REQUIREMENTS.

5.) THE SIDES AND BACKS OF ADJACENT CABINETS WHICH MAY BE EXPOSED TO MOISTURE OR FOOD HANDELING WHEN COUNTERTOPS ARE LOWERED ARE CONSTRUCTED OF DURABLE, NON-ABSORBENT MATERIALS

6.) FINISHED FLOORING IS INSTALLED ON THE FLOOR BENEAT MOVABLE COUNTERTOPS.

SHELVING

1.) LOWER SHELVING AND/OR DRAWER SPACE IS PROVIDED IN THE KITCHEN AT A MAXIMUM 48" HEIGHT.

2.) AT LEAST 50% OF THE SHELF SPACE IN CABINETS OR REFRIGERATOR/FREEZERS IS WITHIN REQUIRED REACH RANGES.

BASE CABINETS

1.) IN COVERED MULTIFAMILY DWELLING UNITS REQUIRED TO BE ACCESSIBLE, BASE CABINETS DIRECTLY UNDER THE KITCHEN SINK COUNTER AREA, INCLUDING TOEBOARD AND SHELVING, ARE REMOVABLE WITHOUT THE USE OF SPECIALIZED TOOLS OR SPECIALIZED KNOWLEDGE TO PROVIDE CLEARANCE FOR A WHEELCHAIR.

2.) FINISHED FLOORING IS PROVIDED ON THE FLOOR BENEATH THE COUNTERTOP.

KITCHEN SINK FAUCET CONTROLS

1.) FAUCETS ARE LEVER TYPE, ELECTRONICALLY ACTIVATED OR APPROVED SELF CLOSING VALVES (MIN. 10 SECOND OPEN FLOW)

2.) FAUCETS ARE OPERABLE WITH ONE HAND AND DO NOT REQUIRE TIGHT GRASPING, PINCHING OR TWISTING OF THE WRIST.

3.) 5 lb MAXIMUM FORCE REQUIRED TO ACTIVATE CONTROLS

ACCESSIBLE COMPARTMENT DOOR

5.) DOOR TO COMPARTMENT SHALL BE EQUIPPED WITH AN AUTOMATIC CLOSING DEVICE (3 SECOND MINIMUM SWEEP TIME FROM OPEN POSITION OF 70 DEGREES TO A POINT 3" FROM THE LATCH).

6.) DOOR SHALL HAVE A CLEAR OPENIG WIDTH OF 34" IF LOCATED AT THE SIDE.

7.) COMPARTMENT DOOR SHALL COMPLY WITH MINIMUM CLEAR SPACE REQUIRED AT DOORS IN GENERAL, 18" ON PULL SIDE, 12" ON PUSH SIDE.

8.) INSIDE AND OUTSIDE OF COMPARTMENT DOOR SHALL BE EQUIPPED WITH A LOOP OR U-SHAPED HANDLE IMMEDIATELYNBELOW THE LATCH. THE LATCH SHALL BE A FLIP-OVER STYLE, SLIDING, OR OTHER HARDWARE NOT REQUIRING TIGHT GRASPING OR TWISTING.

9.) OPENING HARDWARE SHALL BE CENTERED BETWEEN 30" AND 44" ABOVE FINISH FLOOR.

INTERIOR COMPARTMENT

10.) 60" MINIMUM CLEAR SPACE SHALL BE PROVIDED IN FRONT OF THE WATER CLOSET WHEN THE COMPARTMENT DOOR IS AT THE SIDE.

11.) COMPARTMENT SHALL BE A MINIMUM OF 60" WIDE.

12.) 18" BETWEEN CENTER OF WATER CLOSET AND SIDE-WALL CORNER.

13.) 32" MINIMUM CLEARANCE FROM OPPOSITE WALL TO SIDE OF WATER CLOSET.

14.) 42" MINIMUM CLEARANCE FROM CENTERLINE OF WATER CLOSET TO OPPOSITE WALL.

15.) TOP OF TOILET SEAT SHALL BE 17"-19" FROM FLOOR SURFACE.

16.) FLUSH VALVE SHALL BE ON WIDE SIDE OF TOILET AREA.

17.) 44" MAXIMUM FROM FLOOR TO FLUSH VALVE.

18.) 5 LB. MAXIMUM FORCE TO OPERATE FLUSH VALVE.

19.) WALLS WITHIN COMPARTMENT SHALL BE SMOOTH, HARD AND NON-ABSORBENT TO 48" IN HEIGHT, AND SHALL NOT BE ADVERSELY AFFECTED BY MOISTURE.

20.) FLOOR SURFACES OF TOILET ROOM SHALL BE SMOOTH, HARD AND NON- ABSORBENT EXTENDING UPWARD A MINIMUM OF 5" ONTO WALLS.

21.) MINIMUM STRUCTURAL STRENGTH OF GRAB BAR(S) SHALL SUPPORT 250 LB. POINT LOAD; PROVIDE ALL NECESSARY BLOCKING.

22.) SURFACE OF WALL ADJACENT TO GRAB BAR(S) SHALL BE FREE OF SHARP OR ABRASIVE ELEMENTS.

23.) SIDE GRAB BAR SHALL BE A MINIMUM OF 42" LONG AND EXTEND A MINIMUM OF 24" BEYOND THE FRONT OF THE WATER CLOSET.

24.) THE FORWARD END OF THE SIDE GRAB BAR SHALL BE LOCATED A MINIMUM OF 52" FROM THE BACK WALL.

25.) SIDE GRAB BAR SHALL BEGIN A MAXIMUM OF 12" FROM THE REAR WALL.

26.) REAR GRAB BAR SHALL BE A MINIMUM OF 36" LONG.

27.) REAR GRAB BAR SHALL BEGIN A MAXIMUM OF 6" FROM THE CORNER OF THE WALL ON THE TOILET SIDE.

GRAB BARS

1.) DIAMETER OF GRAB BAR(S) SHALL BE 1-1/4" TO 1-1/2" OR SHAPE PROVIDING EQUIVALENT GRIPPING SURFACE.

2.) CLEARANCE BETWEEN THE GRAB BAR(S) AND WALL SHALL BE 1-1/2".

3.) GRAB BARS SHALL BE MOUNTED AT 33" TO CENTER OF BAR ABOVE AND PARALLEL TO FLOOR. (FOR TANK TYPE TOILETS, 36" MAY BE ALLOWED IF TANK OBSTRUCTS PLACEMENT OF BACK BAR).

4.) BARS SHALL BE SMOOTH WITH A MINIMUM RADIUS OF 1/8".

5.) MINIMUM STRUCTURAL STRENGTH OF GRAB BAR(S) SHALL SUPPORT A 250 LB. POINT LOAD.

6.) GRAB BARS SHALL NOT ROTATE WITHIN THEIR FITTINGS.

LAVATORIES

1.) REQUIRED CLEAR SPACE SHALL ADJOIN OR OVERLAP AN ACCESSIBLE ROUTE AND EXTEND A MAXIMUM OF 19" UNDERNEATH THE LAVATORY.

2.) TOE CLEARANCE UNDER LAVATORY SHALL BE A MINIMUM OF 9" HIGH, 30" WIDE, AND EXTEND A MINIMUM OF 11" IN DEPTH FROM THE FRONT OF THE LAVATORY.

3.) DRAIN AND HOT WATER PIPING SHALL BE INSULATED OR CONFIGURED TO PREVENT CONTACT.

4.) THERE SHALL BE NO SHARP OR ABRASIVE ELEMENTS UNDER LAVATORY.

5.) FAUCETS SHALL BE LEVER TYPE, ELECTRONICALLY ACTIVATED OR APPROVED SELF CLOSING VALVES (MIN. 10 SECOND OPEN FLOW)

6.) FAUCETS SHALL BE OPERABLE WITH ONE HAND AND DO NOT REQUIRE TIGHT GRASPING, PINCHING OR TWISTING OF THE WRIST.

7.) 5 LB. MAXIMUM FORCE REQUIRED TO ACTIVATE CONTROLS.

MULTIPLE ACCOMMODATION TOILETS

1.) CLEAR, UNOBSTRUCTED ACCESS A MINIMUM OF 44" IN WIDTH SHALL BE PROVIDED THROUGHOUT THE FACILITY TO REACH THE ACCESSIBLE COMPARTMENT.

2.) CLEAR SPACE OF SUFFICIENT SIZE TO INSCRIBE A 60" DIAMETER CIRCLE OF A CLEAR SPACE 56 INCHES BY 63 INCHES SHALL BE PROVIDED WITHIN THE SANITARY FACILITY ROOM.

3.) 60" DIAMETER OR 56"x63" CLEAR SPACE SHALL BE CLEAR OF OBJECTS FROM THE FLOOR TO A HEIGHT OF 27".

4.) DOORS OTHER THAN THE DOOR TO THE ACCESSIBLE TOILET COMPARTMENT IN ANY POSITION SHALL NOT ENCROACH INTO CLEAR SPACE BY MORE THAN 12".

ACCESSORIES IN SANITARY FACILITIES

1.) MINIMUM 30"x48" CLEAR FLOOR SHALL BE PROVIDED TO ALLOW FORWARD OR PARALLEL APPROACH TO ACCESSORIES.

2.) ONE FULL UNOBSTRUCTED SIDE OF THE CLEAR FLOOR SHALL ADJOIN OR OVERLAP AN ACCESSIBLE ROUTE OR ADJOIN ANOTHER WHEELCHAIR CLEAR FLOOR SPACE.

3.) MIRROR(S) SHALL BE MOUNTED WITH THE BOTTOM EDGE NO HIGHER THAN 40" FROM THE FLOOR.

4.) OPERABLE PARTS (INCLUDING COIN SLOTS) OF ALL FIXTURES OR ACCESSORIES SHALL BE LOCATED A MAXIMUM OF 40" ABOVE FLOOR (I.E., SOAP DISPENSERS, TOUELS, TOILET SEAT COVERS, AUTO-DRYERS, SANITARY NAPKIN DISPENSERS, WASTE RECEPTACLES, ETC.).

5.) CONTROLS AND OPERATING MECHANISMS SHALL BE OPERABLE WITH ONE HAND AND SHALL NOT REQUIRE TIGHT GRASPING, PINCHING, OR TWISTING OF THE WRIST.

6.) THE FORCE REQUIRES TO ACTIVATE CONTROLS SHALL BE 5 LBFT. MAXIMUM.

7.) TOILET PAPER DISPENSER SHALL BE LOCATED ON THE NEAR WALL WITHIN 12" OF THE FRONT EDGE OF THE TOILET SEAT AND SHALL BE MOUNTED 19" MINIMUM HEIGHT FROM FLOOR TO CENTERLINE OF DISPENSER.

8.) TOILET PAPER DISPENSER SHALL ALLOW CONTINUOUS PAPER FLOW AND SHALL NOT CONTROL DELIVERY.

UNAUTHORIZED CHANGES & USES: THE ENGINEER PREPARING THESE PLANS WILL NOT BE RESPONSIBLE FOR, OR LIABLE FOR, UNAUTHORIZED CHANGES TO OR USES OF THESE PLANS. ALL CHANGES TO THE PLANS MUST BE IN WRITING AND MUST BE APPROVED BY THE PREPARER OF THESE PLANS.

WET STAMPED AND SIGNED PLANS BY THE ENGINEER OF RECORD SIGNIFY THAT ALL INFORMATION FROM THE CALCULATIONS HAS BEEN TRANSFERRED TO THE PLANS.

REVISIONS	BY

PACIFIC AFFILIATES
CONSULTING ENGINEERS
930 W. WATERFRONT DRIVE, EUREKA, CA 95501
TEL. (707) 445-3001 • FAX (707) 445-3003

PRELIMINARY

PROFESSIONAL ENGINEER
STRUCTURAL ENGINEER
CIVIL ENGINEER
EXP. 12-31-20
STATE OF CALIFORNIA

ACCESSIBILITY
NOTES & DETAILS

PACIFIC AFFILIATES, INC. HEREBY EXPRESSLY RESERVES ITS COMMON LAW COPYRIGHT AND OTHER PROPERTY RIGHTS IN THESE PLANS AND DRAWINGS ARE NOT TO BE REPRODUCED, CHANGED OR COPIED IN ANY FORM OR MANNER WHATSOEVER WITHOUT THE EXPRESS WRITTEN PERMISSION OF PACIFIC AFFILIATES, INC. NOR ARE THEY ASSIGNED TO ANY THIRD PARTY WITHOUT FIRST OBTAINING LETTER PERMISSION AND CONSENT.

CITY OF EUREKA
PUBLIC RESTROOMS,
NON-MOTORIZED FLOATING DOCK
& AQUATIC RESPONSE CENTER
WATERFRONT DRIVE
EUREKA, CA 95501
APN 002-241-013

Date:	
08/20/2020	
Scale:	Drawn by:
AS NOTED	TS

SHEET NUMBER
ADA-1

JOB NUMBER
2334